Nidec

All for dreams



Quick Start Guide

Unidrive M200/201

Frame sizes 1 to 4

Flexible machine integration through communications

Part Number: 0478-0038-08
Issue: 8

Original Instructions

For the purposes of compliance with the EU Machinery Directive 2006/42/EC, the English version of this manual is the Original Instructions. Manuals in other languages are Translations of the Original Instructions.

Documentation

Manuals are available to download from the following locations: **http://www.drive-setup.com/ctdownloads**

The information contained in this manual is believed to be correct at the time of printing and does not form part of any contract. The manufacturer reserves the right to change the specification of the product and its performance, and the contents of the manual, without notice.

Warranty and Liability

In no event and under no circumstances shall the manufacturer be liable for damages and failures due to misuse, abuse, improper installation, or abnormal conditions of temperature, dust, or corrosion, or failures due to operation outside the published ratings. The manufacturer is not liable for consequential and incidental damages. Contact the supplier of the drive for full details of the warranty terms.

Environmental policy

Control Techniques Ltd operates an Environmental Management System (EMS) that conforms to the International Standard ISO 14001.

Further information on our Environmental Policy can be found at: **http://www.drive-setup.com/environment**

Restriction of Hazardous Substances (RoHS)

The products covered by this manual comply with European and International regulations on the Restriction of Hazardous Substances including EU directive 2011/65/EU and the Chinese Administrative Measures for Restriction of Hazardous Substances in Electrical and Electronic Products.

Disposal and Recycling (WEEE)



When electronic products reach the end of their useful life, they must not be disposed of along with domestic waste but should be recycled by a specialist recycler of electronic equipment. Control Techniques products are designed to be easily dismantled into their major component parts for efficient recycling. The majority of materials used in the product are suitable for recycling.

Product packaging is of good quality and can be re-used. Large products are packed in wooden crates. Smaller products are packaged in strong cardboard cartons which have a high recycled fibre content. Cartons can be re-used and recycled. Polythene, used in protective film and bags for wrapping the product, can be recycled. When preparing to recycle or dispose of any product or packaging, please observe local legislation and best practice.

REACH legislation

EC Regulation 1907/2006 on the Registration, Evaluation, Authorisation and restriction of Chemicals (REACH) requires the supplier of an article to inform the recipient if it contains more than a specified proportion of any substance which is considered by the European Chemicals Agency (ECHA) to be a Substance of Very High Concern (SVHC) and is therefore listed by them as a candidate for compulsory authorisation.

Further information on our compliance with REACH can be found at: **http://www.drive-setup.com/reach**

Registered Office

Nidec Control Techniques Ltd
The Gro
Newtown
Powys
SY16 3BE
UK
Registered in England and Wales. Company Reg. No. 01236886.

Copyright

The contents of this publication are believed to be correct at the time of printing. In the interests of a commitment to a policy of continuous development and improvement, the manufacturer reserves the right to change the specification of the product or its performance, or the contents of the guide, without notice.

All rights reserved. No parts of this guide may be reproduced or transmitted in any form or by any means, electrical or mechanical including photocopying, recording or by an information storage or retrieval system, without permission in writing from the publisher.

Copyright © March 2018 Nidec Control Techniques Ltd

Contents

1 Product information 7
1.1 Ratings 7

2 Options 8

3 Mechanical installation 9

4 Electrical installation 11
4.1 AC supply requirements 11
4.2 External braking resistor 12
4.3 Ground leakage 13
4.4 Control terminal configurations and wiring 14
4.5 EMC 20

5 Keypad and display 22
5.1 Saving parameters 23
5.2 Restoring parameter defaults 23

6 Basic parameters (Menu 0) 24
6.1 Menu 0: Basic parameters 24
6.2 Unidrive M200/201 parameter descriptions 30

7 Running the motor 52

8 Diagnostics 53
8.1 Alarm indications 57

9 NV Media Card Operation 57

10 Machine Control Studio 59

11 UL listing information 60
11.1 UL file reference 60
11.2 Option modules, kits and accessories 60
11.3 Enclosure ratings 60
11.4 Mounting 60
11.5 Environment 60
11.6 Electrical Installation 60
11.7 Motor overload protection and thermal memory retention 61
11.8 External Class 2 supply 61

EU Declaration of Conformity

Nidec Control Techniques Ltd
The Gro
Newtown
Powys
UK
SY16 3BE

This declaration is issued under the sole responsibility of the manufacturer. The object of the declaration is in conformity with the relevant Union harmonization legislation. The declaration applies to the variable speed drive products shown below:

Model number	Interpretation	Nomenclature aaaa - bbc ddddde
aaaa	Basic series	M100, M101, M200, M201, M300, M400, M600, M700, M701, M702, M708, M709, M751, M753, M754, F300, H300, E200, E300, HS30, HS70, HS71, HS72, M000, RECT
bb	Frame size	01, 02, 03, 04, 05, 06, 07, 08, 09, 10, 11
c	Voltage rating	1 = 100 V, 2 = 200 V, 4 = 400 V, 5 = 575 V, 6 = 690 V
ddddd	Current rating	Example 01000 = 100 A
e	Drive format	A = 6P Rectifier + Inverter (internal choke), D = Inverter, E = 6P Rectifier + Inverter (external choke), T = 12P Rectifier + Inverter (external choke)

The model number may be followed by additional characters that do not affect the ratings.

The variable speed drive products listed above have been designed and manufactured in accordance with the following European harmonized standards:

EN 61800-5-1:2007	Adjustable speed electrical power drive systems - Part 5-1: Safety requirements - Electrical, thermal and energy
EN 61800-3: 2004+A1:2012	Adjustable speed electrical power drive systems - Part 3: EMC requirements and specific test methods
EN 61000-6-2:2005	Electromagnetic compatibility (EMC) - Part 6-2: Generic standards - Immunity for industrial environments
EN 61000-6-4: 2007+ A1:2011	Electromagnetic compatibility (EMC) - Part 6-4: Generic standards - Emission standard for industrial environments
EN 61000-3-2:2014	Electromagnetic compatibility (EMC) - Part 3-2: Limits for harmonic current emissions (equipment input current ≤16 A per phase)
EN 61000-3-3:2013	Electromagnetic compatibility (EMC) - Part 3-3: Limitation of voltage changes, voltage fluctuations and flicker in public, low voltage supply systems, for equipment with rated current ≤16 A per phase and not subject to conditional connection

EN 61000-3-2:2014 Applicable where input current < 16 A. No limits apply for professional equipment where input power ≥1 kW.

These products comply with the Restriction of Hazardous Substances Directive (2011/65/EU), the Low Voltage Directive (2014/35/EU) and the Electromagnetic Compatibility Directive (2014/30/EU).

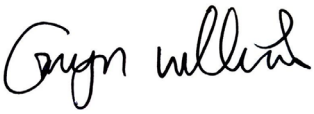

G Williams

Vice President, Technology

Date: 6th September 2017

These electronic drive products are intended to be used with appropriate motors, controllers, electrical protection components and other equipment to form complete end products or systems. Compliance with safety and EMC regulations depends upon installing and configuring drives correctly, including using the specified input filters.

The drives must be installed only by professional installers who are familiar with requirements for safety and EMC. Refer to the Product Documentation. An EMC data sheet is available giving detailed information. The assembler is responsible for ensuring that the end product or system complies with all the relevant laws in the country where it is to be used.

1 Product information

1.1 Ratings

Model	Input phases	Max. cont input current	Max input fuse rating		Nominal cable size				Output current		
					European		USA				
			1 Ph	3 Ph	Input	Output	Input	Output	Max. cont output current	Nominal power	Motor power
	ph	A	A	A	mm^2	mm^2	AWG	AWG	A	kW	hp
01100017	1	8.7	10		1	1	16	16	1.7	0.25	0.33
01100024	1	11.1	16		1	1	14	16	2.4	0.37	0.5
01200017	1	4.5	6		1	1	16	16	1.7	0.25	0.33
01200024	1	5.3	6		1	1	16	16	2.4	0.37	0.5
01200033	1	8.3	10		1	1	16	16	3.3	0.55	0.75
01200042	1	10.4	16		1	1	16	16	4.2	0.75	1
02100042	1	18.8	20		2.5	1	12	16	4.2	0.75	1
02100056	1	24	25		4	1	10	16	5.6	1.1	1.5
02200024	1 / 3	5.3/4.1	6	6	1	1	16	16	2.4	0.37	0.5
02200033	1 / 3	8.3/6.7	10	10	1	1	16	16	3.3	0.55	0.75
02200042	1 / 3	10.4/7.5	16	10	1	1	16	16	4.2	0.75	1
02200056	1 / 3	14.9/11.3	20	15	2.5/1.5	1	12/14	16	5.6	1.1	1.5
02200075	1 / 3	18.1/13.5	20	15	2.5	1	12	16	7.5	1.5	2
02400013	3	2.4		6	1	1	16	16	1.3	0.37	0.5
02400018	3	2.9		6	1	1	16	16	1.8	0.55	0.75
02400023	3	3.5		6	1	1	16	16	2.3	0.75	1
02400032	3	5.1		6	1	1	16	16	3.2	1.1	1.5
02400041	3	6.2		10	1	1	16	16	4.1	1.5	2
03200100	1 / 3	23.9/17.7	25	20	4	1.5	10/12	14	10	2.2	3
03400056	3	8.7		10	1	1	14	16	5.6	2.2	3
03400073	3	12.2		16	1.5	1	12	16	7.3	3	3
03400094	3	14.8		16	2.5	1.5	12	14	9.4	4	5
04200133	1 / 3	23.7/16.9	25	20	4/2.5	2.5	10	12	13.3	3	3
04200176	3	21.3		25	4	2.5	10	12	17.6	4	5
04400135	3	16.3		20	2.5	2.5	10	12	13.5	5.5	7.5
04400170	3	20.7		25	4	2.5	10	12	17	7.5	10

NOTE The nominal cable sizes shown in the table above, are provided as a guide only. Ensure that the cables used conform to the local wiring regulations.

Figure 1-1 Model number structure

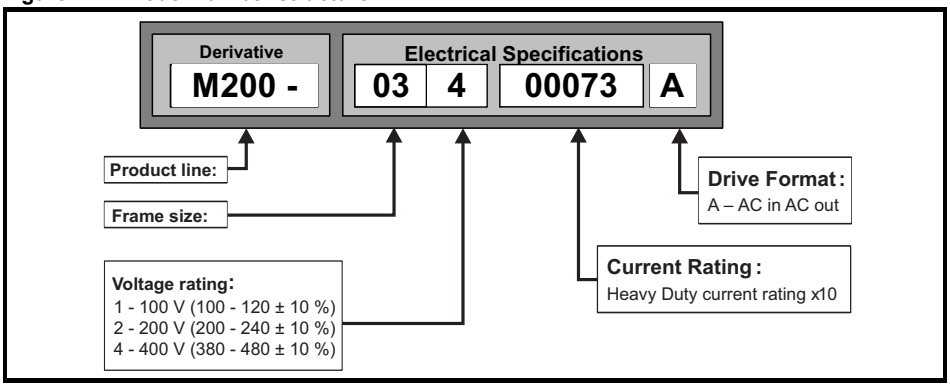

2 Options

Table 2-1 System Integration (SI) option module identification

Type	Option module	Colour	Name	Further details
Fieldbus		Purple	SI-PROFIBUS	See *relevant option module User Guide*
		Medium Grey	SI-DeviceNet	
		Light Grey	SI-CANopen	
		Beige	SI-Ethernet	
		Brown Red	SI-EtherCAT	
		Yellow Green	SI-PROFINET V2	
Automation (I/O expansion)		Orange	SI-I/O	

Table 2-2 AI Adaptors

Type	Option module	Name	Further details
Communications	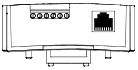	AI-485 Adaptor	See *Control User Guide*
		AI-485 24V Adaptor	
Backup	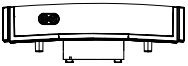	AI-Backup Adaptor	
		AI-Smart Adaptor	

3 Mechanical installation

The drives can be panel mounted with 0 mm space between the drives. For further information on mechanical installation refer to the *Power Installation Guide*.

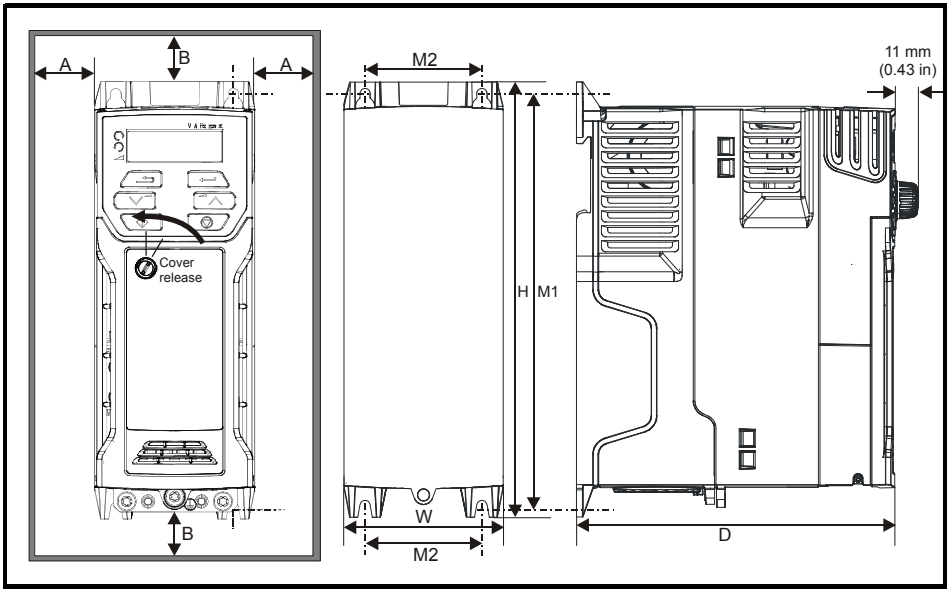

To remove the terminal cover, use a flat bladed screwdriver to rotate the terminal cover locating clip by approximately 30° in a counter clockwise direction, and then slide the cover down.

Drive Size	H		W		D		M1		M2		∅		A		B*	
	mm	in	mm	in	mm	in	mm	in	mm	in	mm	in	mm	in	mm	in
1	160	6.30	75	2.95	130	5.12	143	5.70	53	2.08	5	0.2	0	0.00	100	3.93
2	205	8.07	75	2.95	150	5.91	194	7.63	55	2.17	5	0.2				
3	226	8.90	90	3.54	160	6.30	215	8.46	70.7	2.80	5	0.2				
4	277	10.91	115	4.53	175	6.89	265	10.43	86	3.40	6	0.23				

NOTE A minimum clearance of 100 mm (3.94 in) above and below Frame 01 to 04 products is required for applications where the product is subjected to rated load and rated ambient temperature.

NOTE * A minimum clearance of 50 mm (1.97 in) above and below Frame 01 to 04 products is permissible in applications where either the ambient operating temperature is 35 °C (95 °F) or less or the average output current is derated by 20 %.

NOTE Derating for reduced clearances is to be applied in addition to the derating for increased switching frequency if operating above 3 kHz. Refer to the *Power Installation Guide* for the current derating due to an increase in switching frequency.

NOTE If Din rail mounting is used in an installation, then mounting screws should be used to secure the drive to the back plate.

Table 3-1 Tools required

Tool	Location	Size 1	Size 2	Size 3	Size 4
Small terminal screwdriver	Control, relay terminals	✓	✓	✓	✓
3 mm Flat-bladed screwdriver	Power terminals	✓			
5 mm Flat-bladed screwdriver	Terminal cover	✓	✓	✓	✓
4 mm Flat-bladed screwdriver	AC power terminals		✓		
Philips screwdriver	Power terminals		✓	✓	✓
Torx 10 driver	EMC & MOV screws	✓	✓	✓	✓
Torx 15 driver	Fan screw	✓			
Torx 20 driver	Fan screw		✓	✓	✓

Table 3-2 Recommended torque settings

Model size	Terminal block description	Torque settings
All	Control terminals	0.2 N m (0.15 lb ft)
	Relay terminals	0.5 N m (0.37 lb ft)
	Ground terminals	1.5 N m (1.10 lb ft)
1	Power terminals	0.5 N m (0.37 lb ft)
2, 3, 4		1.4 N m (1.03 lb ft)

Table 3-3 Tightening torque for mounting feet

Drive size	Tightening torque
1 to 3	1.3 N m (1 lb ft) to 1.6 N m (1.2 lb ft)
4	2.5 N m (1.8 lb ft) to 2.8 N m (2.1 lb ft)

Figure 3-1 Feature diagram (size 2 shown)

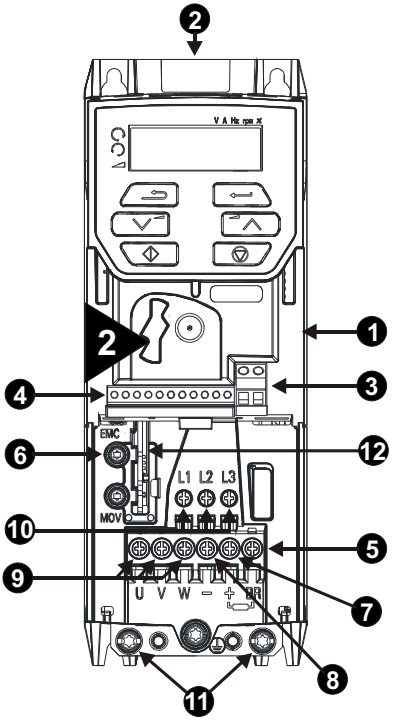

Key

1. Rating label (On side of drive)
2. Identification label
3. Relay connections
4. Control connections
5. Braking terminal
6. Internal EMC filter screw
7. DC bus +
8. DC bus -
9. Motor connections
10. AC supply connections
11. Ground connections
12. Option module connection

4 Electrical installation

An overlay of the electrical connections / terminals is included on the back page of this manual.

4.1 AC supply requirements

Voltage:

100 V drive: 100 V to 120 V ±10 %
200 V drive: 200 V to 240 V ±10 %
400 V drive: 380 V to 480 V ±10 %

Number of phases: 3

Maximum supply imbalance: 2 % negative phase sequence (equivalent to 3 % voltage imbalance between phases).

Frequency range: 45 to 66 Hz.

For UL compliance only, the maximum supply symmetrical fault current must be limited to 100 kA.

NOTE On the size 2 110 V drives or when connecting single phase to a dual rated 200 V unit, the supply should be connected to L1 and L3. Also the DC bus (-) terminal on 110 V drives has no internal connection. The 110 V drives use a voltage doubler circuit on the input, therefore the default for *Motor Rated Voltage* (Pr **08**) is 230 V.

4.2 External braking resistor

Overload protection
When an external braking resistor is used, it is essential that an overload protection device is incorporated in the braking resistor circuit; as shown in the electrical diagram on the back cover.

4.2.1 Minimum resistance values and peak power rating for the braking resistor at 40 °C (104 °F)

Table 4-1 Braking resistor resistance and power rating (100 V)

Model	Minimum resistance* Ω	Instantaneous power rating kW	Continuous power rating kW
01100017	130	1.1	0.25
01100024			0.37
02100042	68	2.2	0.75
02100056			1.1

Table 4-2 Braking resistor resistance and power rating (200 V)

Model	Minimum resistance* Ω	Instantaneous power rating kW	Continuous power rating kW
01200017	130	1.1	0.25
01200024			0.37
01200033			0.55
01200042			0.75
02200024	68	2.2	0.37
02200033			0.55
02200042			0.75
02200056			1.1
02200075			1.5
03200100	45	3.3	2.2
04200133	22	6.0	3.0
04200176			4.0

* Resistor tolerance: ±10 %

Table 4-3 Braking resistor resistance and power rating (400 V)

Model	Minimum resistance* Ω	Instantaneous power rating kW	Continuous power rating kW
02400013	270	2.2	0.37
02400018			0.55
02400023			0.75
02400032			1.1
02400041			1.5
03400056	100	6.0	2.2
03400073			3
03400094			4
04400135	50	11.2	5.5
04400170			7.5

* Resistor tolerance: ±10 %

4.3 Ground leakage

The ground leakage current depends upon whether the internal EMC filter is installed or not. The drive is supplied with the filter installed. Instructions for removing the internal EMC filter are given in section 4.5.2 *Removing the internal EMC filter* on page 21.

With internal filter installed:

Size 1:

8.1 mA* AC at 110 V 50 Hz
9.5 mA* AC at 230 V 50 Hz

Size 2:

13 mA* AC at 110 V, 50 Hz (1 phase)
6.3 mA* AC at 230 V, 50 Hz (3 phase)
17.5 mA* AC at 230 V, 50 Hz (1 phase)
9.2 mA* AC at 415 V, 50 Hz (3 phase)

Size 3:

17.1 mA* AC at 230 V 50 Hz (1 phase)
5.9 mA* AC at 230 V 50 Hz (3 phase)
5.7 mA* AC at 415 V 50 Hz (3 phase)

Size 4:

21.3 mA* AC at 230 V 50 Hz (1 phase)
9.7 mA* AC at 230 V 50 Hz (3 phase)
13.3 mA* AC at 415 V 50 Hz (3 phase)

* Proportional to the supply voltage and frequency.

With internal filter removed:

Size 1: < 1 mA

Size 2: **110 V:** < 1.2 mA
230 V: < 1 mA
415 V: < 2.3 mA

Size 3: **230 V:** < 1.6 mA
415 V: < 1 mA

Size 4: < 1 mA

NOTE The above leakage currents are just the leakage currents of the drive and do not take into account any leakage currents of the motor or motor cable.



When the internal filter is installed the leakage current is high. In this case a permanent fixed ground connection must be provided, or other suitable measures taken to prevent a safety hazard occurring if the connection is lost.



When the leakage current exceeds 3.5 mA, a permanent fixed ground connection must be provided using two independent conductors each with a cross-section equal to or exceeding that of the supply conductors. The drive is provided with two ground connections to facilitate this. Both ground connections are necessary to meet EN 61800-5-1: 2007.

4.3.1 Use of residual current device (RCD)

There are three common types of ELCB / RCD:

1. AC - detects AC fault currents
2. A - detects AC and pulsating DC fault currents (provided the DC current reaches zero at least once every half cycle)
3. B - detects AC, pulsating DC and smooth DC fault currents
   - Type AC should never be used with drives.
   - Type A can only be used with single phase drives
   - Type B must be used with three phase drives



Only type B ELCB / RCD are suitable for use with 3 phase inverter drives.

If an external EMC filter is used with an ELCB / RCD, a delay of at least 50 ms should be incorporated to ensure spurious trips are not seen. The leakage current is likely to exceed the trip level if all of the phases are not energized simultaneously.

4.4 Control terminal configurations and wiring

05		**Drive Configuration**							
RW	Txt						PT	US	
OL **RFC-A**	⇳	AV (0), AI (1), AV.Pr (2), AI.Pr (3), PrESEt (4), PAd (5), PAd.rEF (6), E.Pot (7), torquE (8), Pid (9)			⇨	AV (0)*			

* With Unidrive M201, the default is PAd (5). The setting of Pr **05** automatically sets the drive configuration.

Value	Text	Description
0	AV	Analog input 1 (voltage) or Analog input 2 (voltage) selected by terminal (Local/Remote)
1	AI	Analog input 1 (current) or Analog input 2 (voltage) selected by terminal (Local/Remote)
2	AV.Pr	Analog input 1 (voltage) or 3 presets selected by terminal
3	AI.Pr	Analog input 1 (current) or 3 presets selected by terminal
4	PrESEt	Four presets selected by terminal
5	PAd	Keypad reference
6	PAd.rEF	Keypad reference with terminal control
7	E.Pot	Electronic Potentiometer
8	torquE	Torque mode, Analog input 1 (current frequency reference) or Analog input 2 (voltage torque reference) selected by terminal
9	Pid	PID mode, Analog input 1 (current feedback source) and Analog input 2 (voltage reference source)

Action will only occur if the drive is inactive and no User Actions are running. Otherwise, the parameter will return to its pre altered value on exit from edit mode. All parameters are saved if this parameter changes.

Figure 4-1 Pr 05 = AV

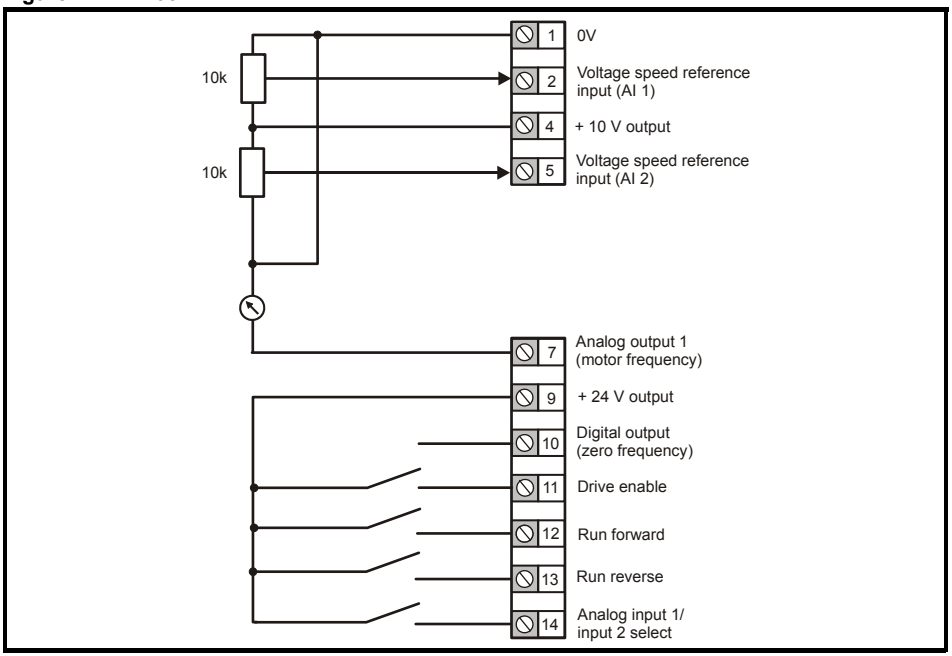

Figure 4-2 Pr 05 = AI

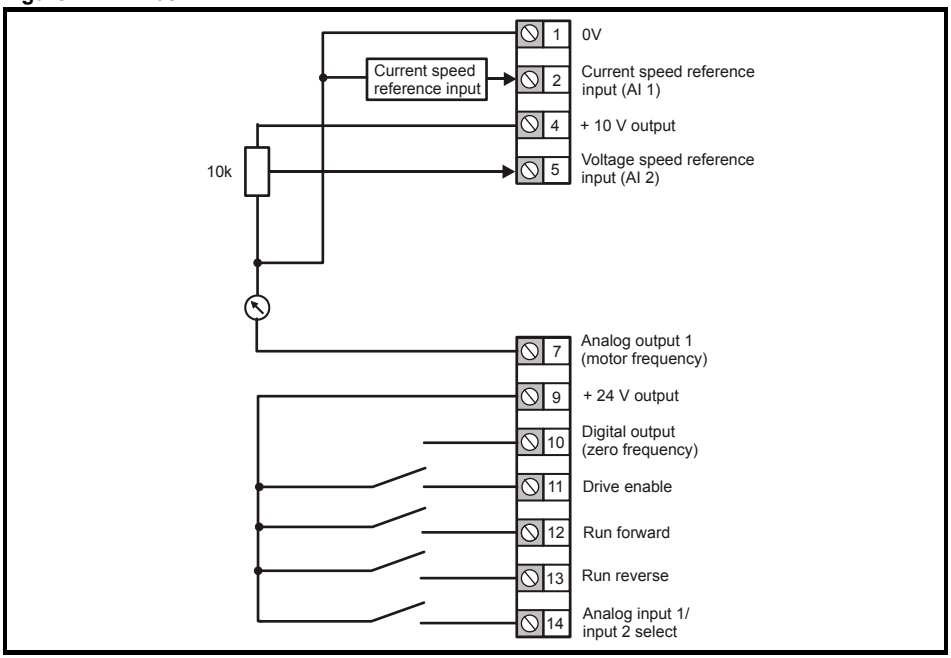

Figure 4-3 Pr 05 = AV.Pr

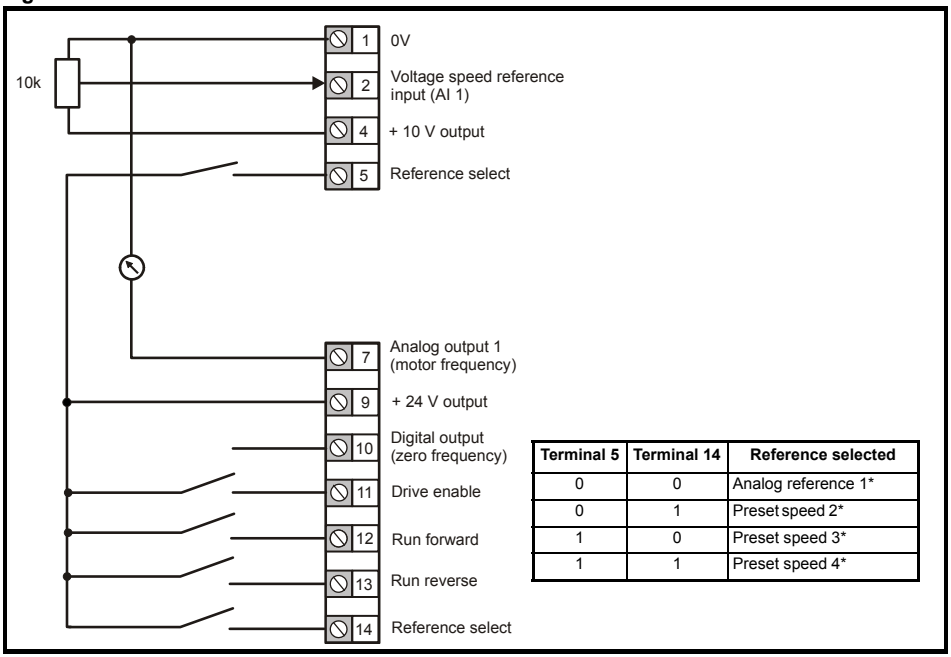

Terminal 5	Terminal 14	Reference selected
0	0	Analog reference 1*
0	1	Preset speed 2*
1	0	Preset speed 3*
1	1	Preset speed 4*

* Refer to the *Control User Guide*.

Figure 4-4 Pr 05 = AI.Pr

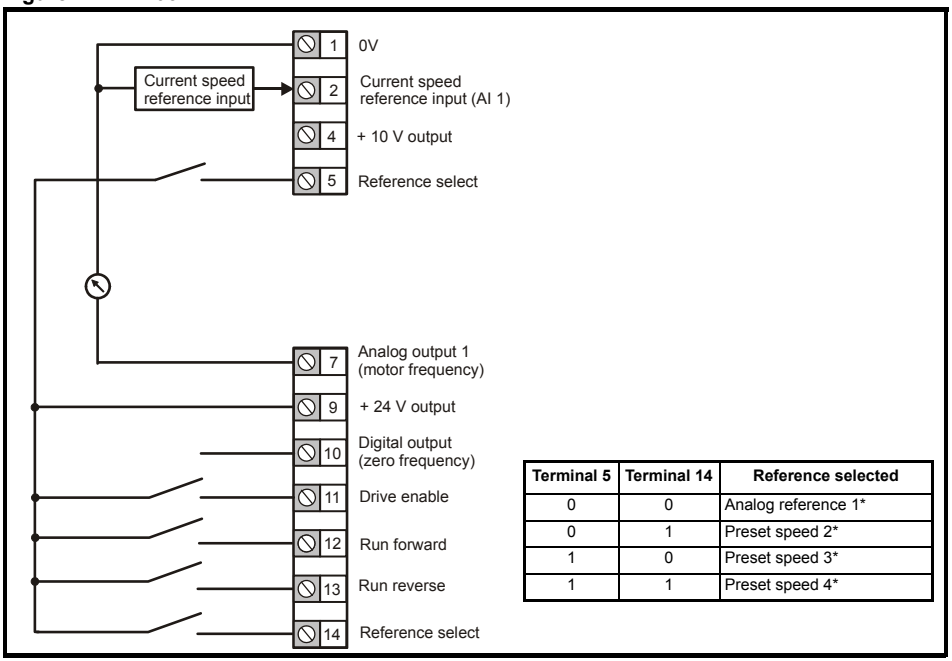

Terminal 5	Terminal 14	Reference selected
0	0	Analog reference 1*
0	1	Preset speed 2*
1	0	Preset speed 3*
1	1	Preset speed 4*

Figure 4-5 Pr 05 = PrESEt

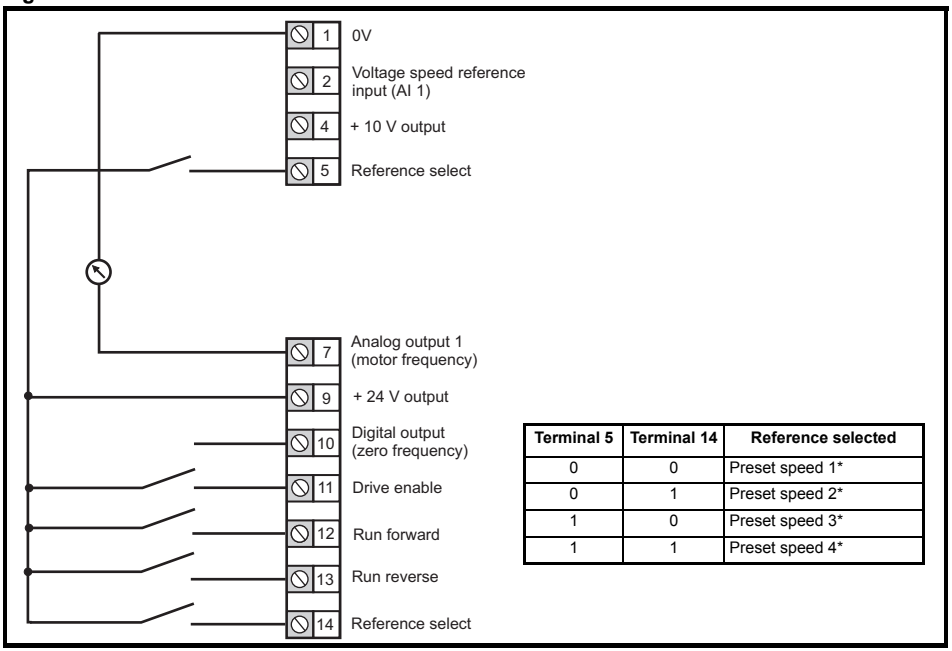

Terminal 5	Terminal 14	Reference selected
0	0	Preset speed 1*
0	1	Preset speed 2*
1	0	Preset speed 3*
1	1	Preset speed 4*

* Refer to the *Control User Guide*.

Figure 4-6 Pr 05 = PAd

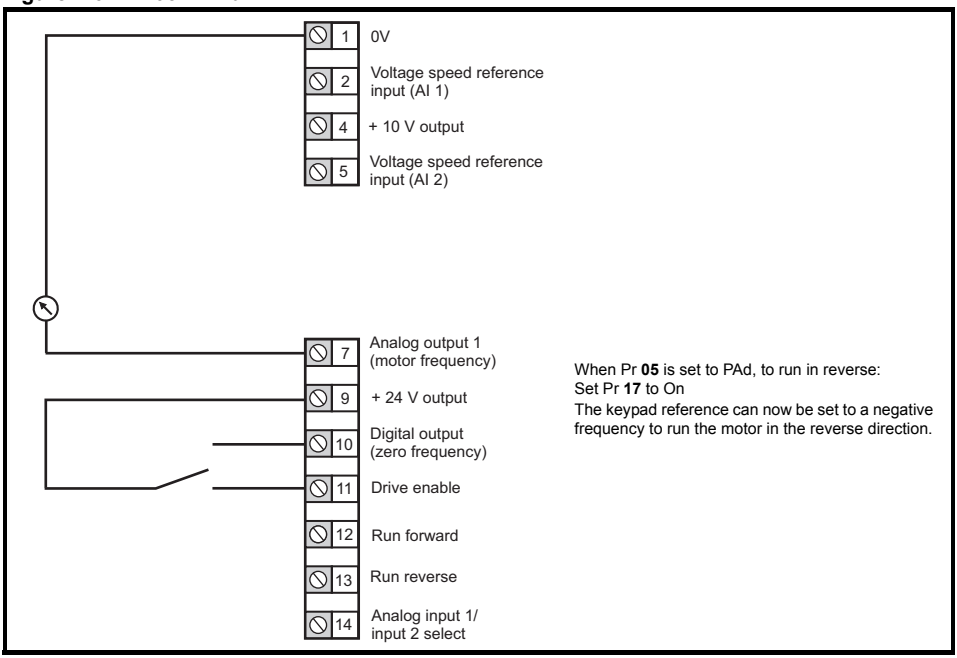

Figure 4-7 Pr 05 = PAd.rEF

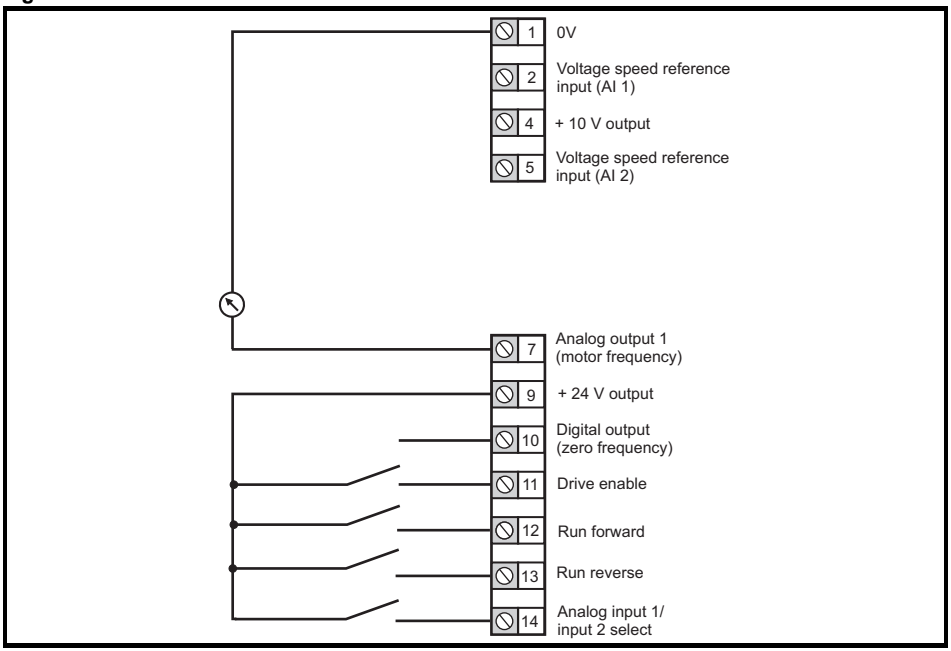

Figure 4-8 Pr 05 = E.Pot

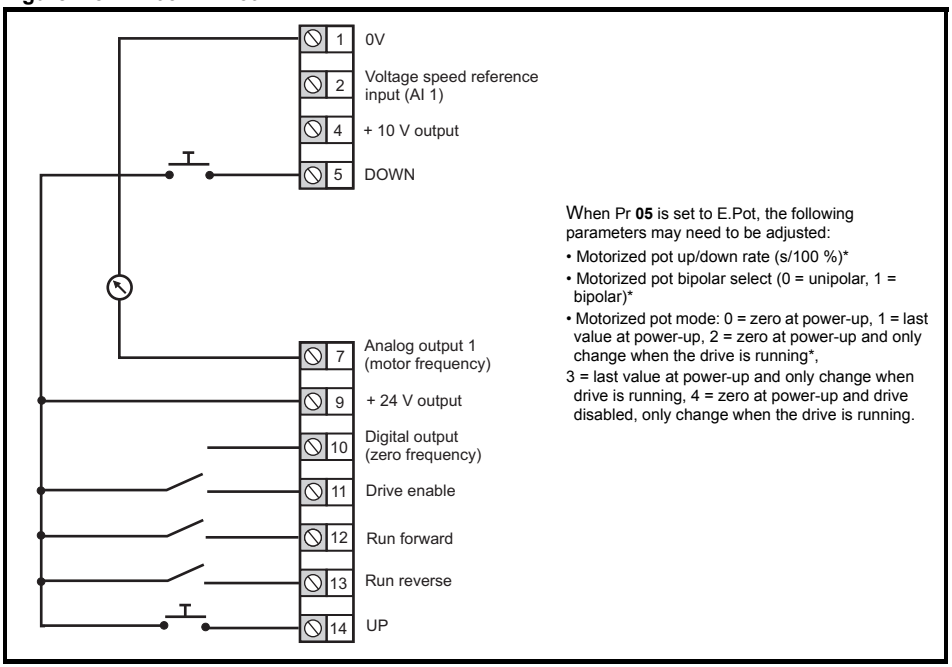

* Refer to the *Control User Guide*.

Figure 4-9 Pr 05 = torquE

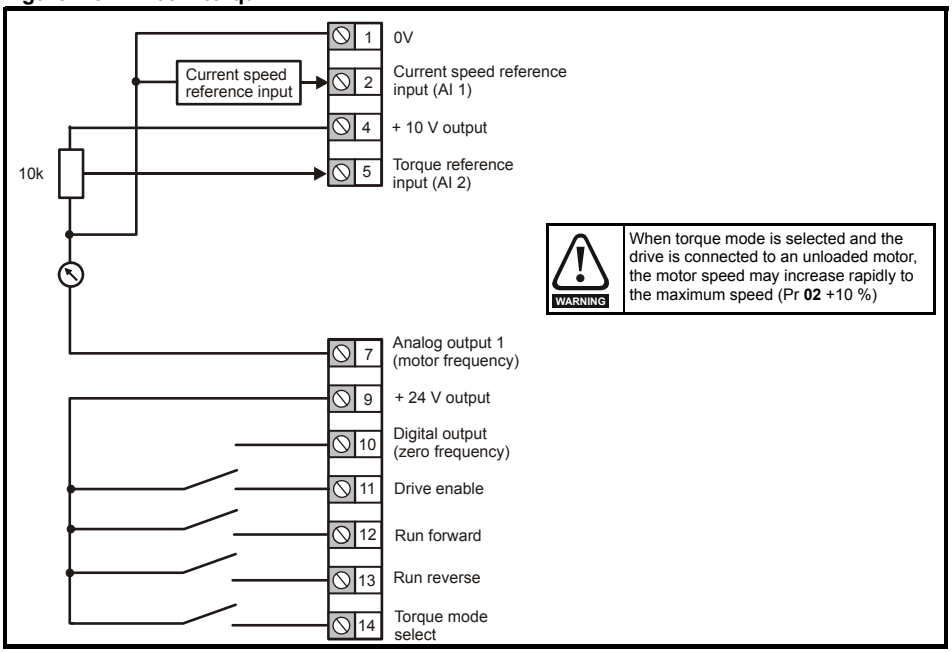

Figure 4-10 Pr 05 = Pid

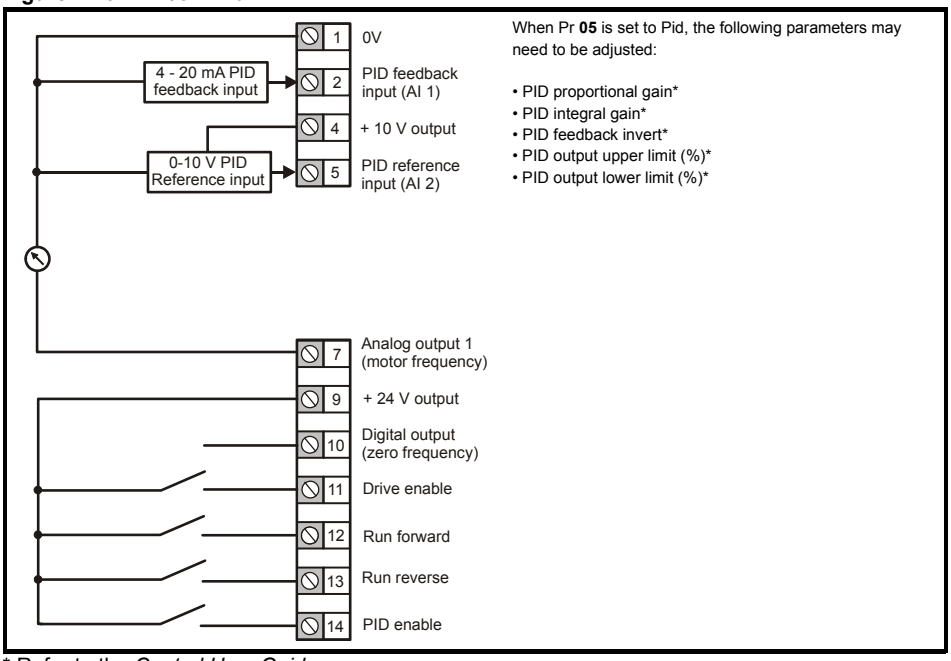

* Refer to the *Control User Guide*.

4.5 EMC

4.5.1 Internal EMC filter

It is recommended that the internal EMC filter be kept in place unless there is a specific reason for removing it. If the drive is used as a motoring drive as part of a regen system, then the internal EMC filter must be removed.

The internal EMC filter reduces radio-frequency emission into the line power supply.

For longer motor cables, the filter continues to provide a useful reduction in emission levels and when used with any length of shielded motor cable up to the limit for the drive, it is unlikely that nearby industrial equipment will be disturbed. It is recommended that the filter be used in all applications unless the instructions given above require it to be removed, or where the ground leakage current is unacceptable.

4.5.2 Removing the internal EMC filter

WARNING

The supply must be disconnected before removing the internal EMC filter.

Figure 4-11 Removal of the internal EMC filter (size 2 shown)

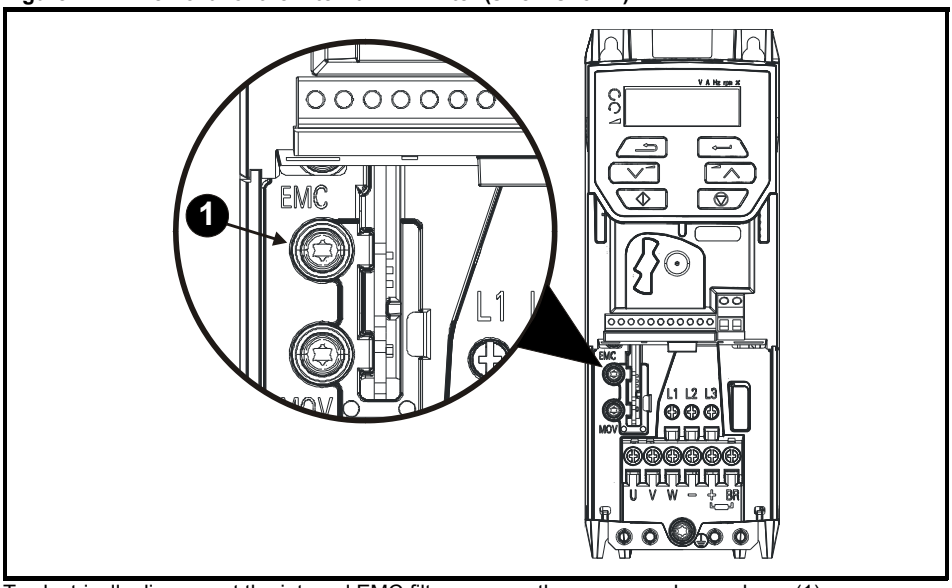

To electrically disconnect the internal EMC filter, remove the screw as shown above (1).

4.5.3 Further EMC precautions

Further EMC precautions are required if more stringent EMC emission requirements apply:

- Operation in the first environment of EN 61800-3:2004+A1:2012.
- Conformity to the generic emission standards
- Equipment which is sensitive to electrical interference operating nearby

In this case it is necessary to use:

- The optional external EMC filter
- A shielded motor cable, with shield clamped to the grounded metal panel
- A shielded control cable, with shield clamped to the grounded metal panel

Full instructions are given in the *Power Installation Guide.*

A full range of external EMC filters are also available for use with *Unidrive M200 / M201*, shown in the *Power Installation Guide*.

5 Keypad and display

The keypad and display provide information to the user regarding the operating status of the drive, alarms and trip codes, and provide the means for changing parameters, stopping and starting the drive, and the ability to perform a drive reset.

Figure 5-1 Unidrive M200 keypad detail

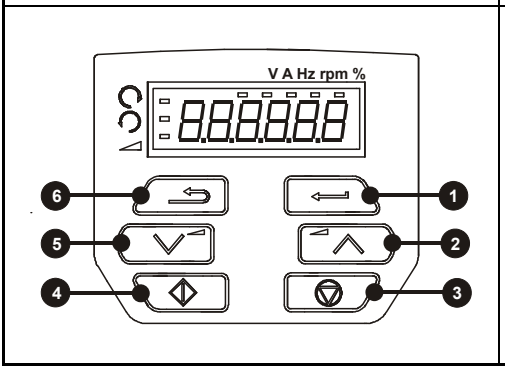

Figure 5-2 Unidrive M201 keypad detail

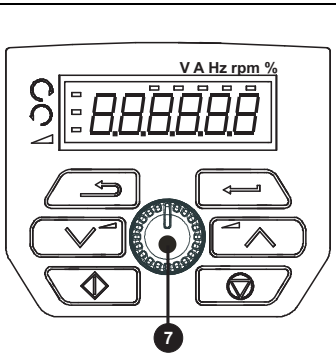

(1) The Enter button is used to enter parameter view or edit mode, or to accept a parameter edit.

(2 / 5) The Navigation buttons can be used to select individual parameters or to edit parameter values.

(3) The Stop / Reset button (red) is used to stop and reset the drive in keypad mode. It can also be used to reset the drive in terminal mode.

(4) The Start button (green) is used to start the drive in keypad mode.

(6) The Escape button is used to exit from the parameter edit / view mode.

(7) The Speed ref potentiometer is used to control the frequency reference in keypad mode (only on Unidrive M201).

Table 5-1 Status indications

String	Description	Drive output stage
inh	The drive is inhibited and cannot be run. The Drive Enable signal is not applied to the drive enable terminal or is set to 0.	Disabled
rdy	The drive is ready to run. The drive enable is active, but the drive inverter is not active because the final drive run is not active	Disabled
StoP	The drive is stopped / holding zero speed.	Enabled
S.Loss	Supply loss condition has been detected	Enabled
dc inj	The drive is applying dc injection braking	Enabled
Er	The drive has tripped and no longer controlling the motor. The trip code appears on the display.	Disabled
UV	The drive is in the under voltage state either in low voltage or high voltage mode.	Disabled
HEAt	The motor pre-heat function is active	Enabled

5.1 Saving parameters

When changing a parameter in Menu 0, the new value is saved when pressing the Enter button  to return to parameter view mode from parameter edit mode.

If parameters have been changed in the advanced menus, then the change will not be saved automatically. A save function must be carried out.

Procedure

1. Select ‘Save' in Pr **00** or Pr **mm.000** (alternatively enter a value of 1001 in Pr **00** or Pr **mm.000**)
2. Either:

- Press the red  reset button
- Carry out a drive reset through serial communications by setting Pr **10.038** to 100

5.2 Restoring parameter defaults

Restoring parameter defaults by this method saves the default values in the drives memory. *User Security Status* (Pr **10**) and *User Security Code* (Pr **25**) are not affected by this procedure.

Procedure

1. Ensure the drive is not enabled, i.e. drive is in inhibit or under voltage state.
2. Select 'Def.50’ or 'Def.60' in Pr **00** or Pr **mm.000** (alternatively, enter 1233 (50 Hz settings) or 1244 (60 Hz settings) in Pr **00** or Pr **mm.000**).
3. Either:

- Press the red  reset button
- Carry out a drive reset through serial communications by setting Pr **10.038** to 100

6 Basic parameters (Menu 0)

Menu 0 is used to bring together various commonly used parameters for basic easy set up of the drive.

6.1 Menu 0: Basic parameters

Parameter		Range (⇳)		Default (⇨)		Type					
		OL	RFC-A	OL	RFC-A						
01	Minimum Speed	0.00 to Pr **02** Hz		0.00 Hz		RW	Num				US
02	Maximum Speed	0.00 to 550.00 Hz		Def.50: 50.00 Hz Def.60: 60.00 Hz		RW	Num				US
03	Acceleration Rate 1	0.0 to 32000.0 s/100 Hz		5.0 s/100 Hz		RW	Num				US
04	Deceleration Rate 1	0.0 to 32000.0 s/100 Hz		10.0 s/100 Hz		RW	Num				US
05	Drive Configuration	AV (0), AI (1), AV.Pr (2), AI.Pr (3), PrESEt (4), PAd (5), PAd.rEF (6), E.Pot (7), torquE (8), Pid (9)		AV (0)*		RW	Txt			PT	US
06	Motor Rated Current	0.00 to Drive Rating A		Maximum Heavy Duty Rating A		RW	Num		RA		US
07	Motor Rated Speed**	0.0 to 33000.0 rpm		Def.50: 1500.0 rpm Def.60: 1800.0 rpm	Def.50: 1450.0 rpm Def.60: 1750.0 rpm	RW	Num				US
08	Motor Rated Voltage	0 to 240 V or 0 to 480 V		110V drive: 230 V 200V drive: 230 V 400V drive Def.50: 400 V 400V drive Def.60: 460 V		RW	Num		RA		US
09	Motor Rated Power Factor***	0.00 to 1.00		0.85		RW	Num		RA		US
10	User Security Status	LEVEL.1 (0), LEVEL.2 (1), ALL (2), StAtUS (3), no.Acc (4)		LEVEL.1 (0)		RW	Num	ND		PT	
11	Start/Stop Logic Select	0 to 6		0		RW	Num				US
15	Jog Reference	0.00 to 300.00 Hz		1.50 Hz		RW	Num				US
16	Analog Input 1 Mode	4-20.S (-6), 20-4.S (-5), 4-20.L (-4), 20-4.L (-3), 4-20.H (-2), 20-4.H (-1), 0-20 (0), 20-0 (1), 4-20.tr (2), 20-4.tr (3), 4-20 (4), 20-4 (5), Volt (6)		Volt (6)		RW	Txt				US
17	Bipolar Reference Enable	Off (0) or On (1)		Off (0)		RW	Bit				US
18	Preset Reference 1	0.00 to Pr **02** Hz		0.00 Hz		RW	Num				US
19	Preset Reference 2	0.00 to Pr **02** Hz		0.00 Hz		RW	Num				US
20	Preset Reference 3	0.00 to Pr **02** Hz		0.00 Hz		RW	Num				US
21	Preset Reference 4	0.00 to Pr **02** Hz		0.00 Hz		RW	Num				US
22	Status Mode Parameter 2	0.000 to 30.999		4.020		RW	Num			PT	US
23	Status Mode Parameter 1	0.000 to 30.999		2.001		RW	Num			PT	US
24	Customer Defined Scaling	0.000 to 10.000		1.000		RW	Num				US
25	User Security Code	0 to 9999		0		RW	Num	ND		PT	US
27	Power-up Keypad Control Mode Reference	rESEt (0), LASt (1), PrESEt (2)		rESEt (0)		RW	Txt				US
28	Ramp Mode Select	Fast (0), Std (1), Std.bst (2), Fst.bst (3)		Std (1)		RW	Txt				US

Parameter		Range (⇳)		Default (⇨)		Type					
		OL	RFC-A	OL	RFC-A						
29	Ramp Enable		Off (0) or On (1)		On (1)	RW	Bit				US
30	Parameter Cloning	NonE (0), rEAd (1), Prog (2), Auto (3), boot (4)		NonE (0)		RW	Txt		NC		US
31	Stop Mode	CoASt (0), rP (1), rP.dc I (2), dc I (3), td.dc I (4), diS (5),	CoASt (0), rP (1), rP.dc I (2), dc I (3), td.dc I (4), diS (5), No.rP (6)	rP (1)		RW	Txt				US
32	Dynamic V to F Select / Flux Optimization Select	0 to 1		0		RW	Num				US
33	Catch A Spinning Motor	dis (0), Enable (1), Fr.Only (2), Rv.Only (3)		dis (0)		RW	Txt				US
34	Digital Input 5 Select	Input (0), th.Sct (1), th (2), th.Notr (3), Fr (4)		Input (0)		RW	Txt				US
35	Digital Output 1 Control	0 to 21		0		RW	Num				US
36	Analog Output 1 Control	0 to 14		0		RW	Txt				US
37	Maximum Switching Frequency	0.667 (0), 1 (1), 2 (2), 3 (3), 4 (4), 6 (5), 8 (6), 12 (7), 16 (8) kHz	2 (2), 3 (3), 4 (4), 6 (5), 8 (6), 12 (7), 16 (8) kHz	3 (3) kHz		RW	Txt				US
38	Autotune	0 to 2	0 to 3	0		RW	Num		NC		US
39	Motor Rated Frequency	0.00 to 550.00 Hz		Def.50: 50.00 Hz Def.60: 60.00 Hz		RW	Num		RA		US
40	Number of Motor Poles****	Auto (0) to 32 (16)		Auto (0)		RW	Num				US
41	Control Mode	Ur.S (0), Ur (1), Fd (2), Ur.Auto (3), Ur.I (4), SrE (5), Fd.tap (6)		Ur.I (4)		RW	Txt				US
42	Low Frequency Voltage Boost	0.0 to 25.0 %		3.0 %		RW	Num				US
43	Serial Baud Rate	600 (1), 1200 (2), 2400 (3), 4800 (4), 9600 (5), 19200 (6), 38400 (7), 57600 (8), 76800 (9), 115200 (10)		19200 (6)		RW	Txt				US
44	Serial Address	1 to 247		1		RW	Num				US
45	Reset Serial Communications	Off (0) or On (1)		Off (0)		RW	Bit	ND	NC		US
46	Brake Controller Upper Current Threshold	0 to 200 %		50 %		RW	Num				US
47	Brake Controller Lower Current Threshold	0 to 200 %		10 %		RW	Num				US
48	Brake Controller Brake Release Frequency	0.00 to 20.00 Hz		1.00 Hz		RW	Num				US
49	Brake Controller Brake Apply Frequency	0.00 to 20.00 Hz		2.00 Hz		RW	Num				US
50	Brake Controller Brake Delay	0.0 to 25.0 s		1.0 s		RW	Num				US
51	Brake Controller Post-brake Release Delay	0.0 to 25.0 s		1.0 s		RW	Num				US
53	Brake Controller Initial Direction	rEF (0), For (1), rEv (2)		rEF (0)		RW	Txt				US

Parameter		Range (⇕)		Default (⇨)		Type					
		OL	RFC-A	OL	RFC-A						
54	Brake Controller Brake Apply Through Zero Threshold	0.00 to 25.00 Hz		1.00 Hz		RW	Num				US
55	Brake Controller Enable	diS (0), rELAy (1), dig IO (2), USEr (3)		diS (0)		RW	Txt				US
56	Trip 0	0 to 255				RO	Txt	ND	NC	PT	PS
57	Trip 1	0 to 255				RO	Txt	ND	NC	PT	PS
58	Trip 2	0 to 255				RO	Txt	ND	NC	PT	PS
59	OUP Enable	Stop (0) or Run (1)		Run (1)		RW	Txt				US
60	OUP Status	-2147483648 to 2147483647				RO	Num	ND	NC	PT	
65	Frequency Controller Proportional Gain Kp1		0.000 to 200.000 s/rad		0.100 s/rad	RW	Num				US
66	Frequency Controller Integral Gain Ki1		0.00 to 655.35 s^2/rad		0.10 s^2/rad	RW	Num				US
67	Sensorless Mode Filter		4 (0), 5 (1), 6 (2), 8 (3), 12 (4), 20 (5) ms		4 (0) ms	RW	Txt				US
69	Spin Start Boost	0.0 to 10.0		1.0		RW	Num				US
70	PID1 Output	±100.00 %				RO	Num	ND	NC	PT	
71	PID1 Proportional Gain	0.000 to 4.000		1.000		RW	Num				US
72	PID1 Integral Gain	0.000 to 4.000		0.500		RW	Num				US
73	PID1 Feedback Invert	Off (0) or On (1)		Off (0)		RW	Bit				US
74	PID1 Output Upper Limit	0.00 to 100.00 %		100.00 %		RW	Num				US
75	PID1 Output Lower Limit	±100.00 %		-100.00 %		RW	Num				US
76	Action on Trip Detection	0 to 31		0		RW	Num	ND	NC	PT	US
77	Maximum Heavy Duty Current Rating	0.00 to Drive HD Current Rating A				RO	Num	ND	NC	PT	
78	Software Version	0 to 99.99.99				RO	Num	ND	NC	PT	
79	User Drive Mode	OPEn.LP (1), RFC-A (2)		OPEn.LP (1)	RFC-A (2)	RW	Txt	ND	NC	PT	US
81	Reference Selected	-Pr **02** to Pr **02** or Pr **01** to Pr **02** Hz				RO	Num	ND	NC	PT	
82	Pre-ramp Reference	-Pr **02** to Pr **02** or Pr **01** to Pr **02** Hz				RO	Num	ND	NC	PT	
83	Final Demand Reference	-Pr **02** to Pr **02** or Pr **01** to Pr **02** Hz				RO	Num	ND	NC	PT	FI
84	D.C. Bus Voltage	0 to 415 or 0 to 830 V				RO	Num	ND	NC	PT	FI
85	Output Frequency	± 550.00 Hz				RO	Num	ND	NC	PT	FI
86	Output Voltage	0 to 325 or 0 to 650 V				RO	Num	ND	NC	PT	FI
87	Motor Rpm	± 33000.0 rpm				RO	Num	ND	NC	PT	FI
88	Current Magnitude	0 to Drive Maximum Current A				RO	Num	ND	NC	PT	FI
89	Torque Producing Current	± Drive Maximum Current A				RO	Num	ND	NC	PT	FI
90	Digital I/O Read Word	0 to 2047				RO	Bin	ND	NC	PT	
91	Reference On	Off (0) or On (1)				RO	Bit	ND	NC	PT	
92	Reverse Select	Off (0) or On (1)				RO	Bit	ND	NC	PT	
93	Jog Select	Off (0) or On (1)				RO	Bit	ND	NC	PT	
94	Analog Input 1	± 100.00 %				RO	Num	ND	NC	PT	FI
95	Analog Input 2	± 100.00 %				RO	Num	ND	NC	PT	FI

* With Unidrive M201, the default is PAd (5).

** Setting Pr **07** to 0.0 will disable slip compensation.
*** Following a rotating autotune, Pr **09** is continuously written to by the drive, calculated from the value of *Stator Inductance* (Pr **05.025**). To manually enter a value into Pr **09**, Pr **05.025** will need to be set to 0. Refer to the description of Pr **05.010** in the *Parameter Reference Guide* for further details.
**** If this parameter is read via serial communications, it will indicate pole pairs.

RW	Read / Write	RO	Read only	Num	Number parameter	Bit	Bit parameter	Txt	Text string	Bin	Binary parameter	FI	Filtered
ND	No default value	NC	Not copied	PT	Protected parameter	RA	Rating dependent	US	User save	PS	Power-down save	DE	Destination

Figure 6-1 Menu 0 logic diagram

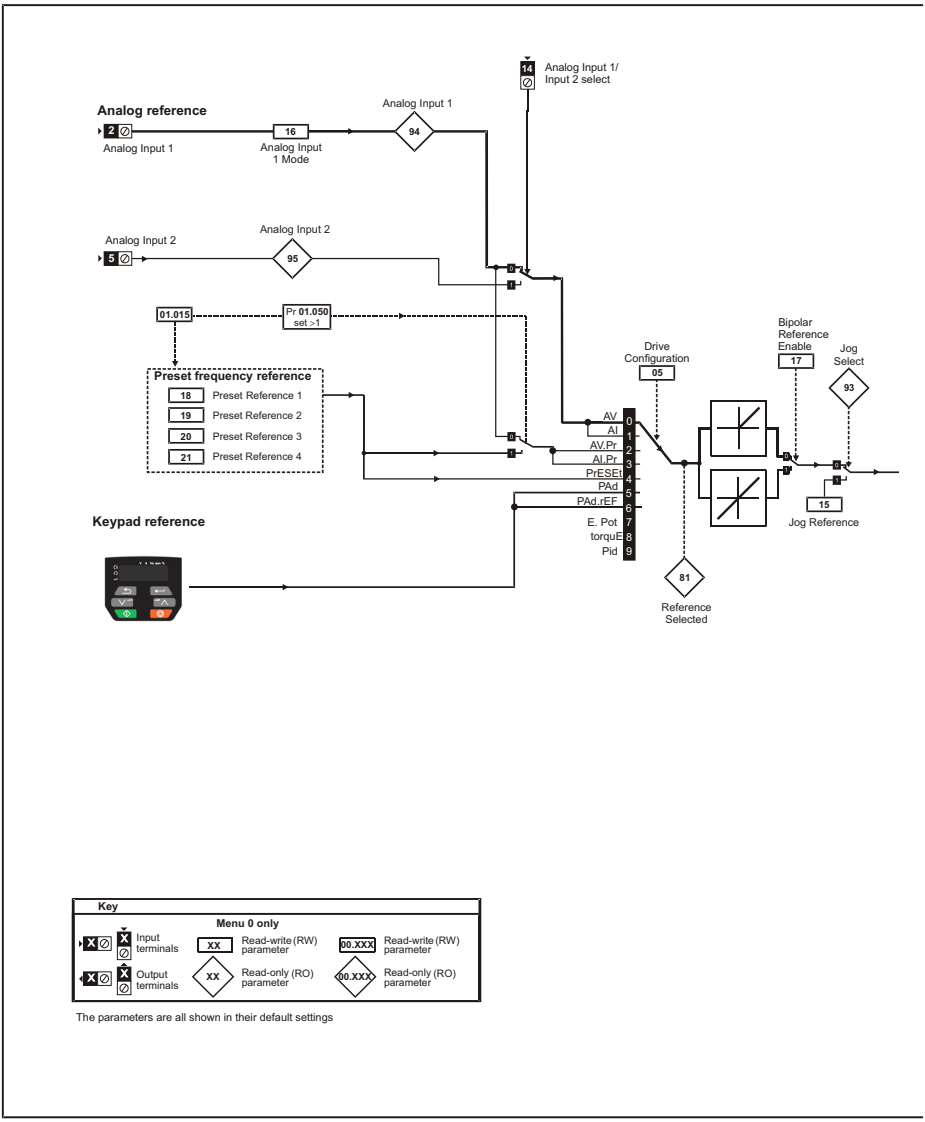

The parameters are all shown in their default settings

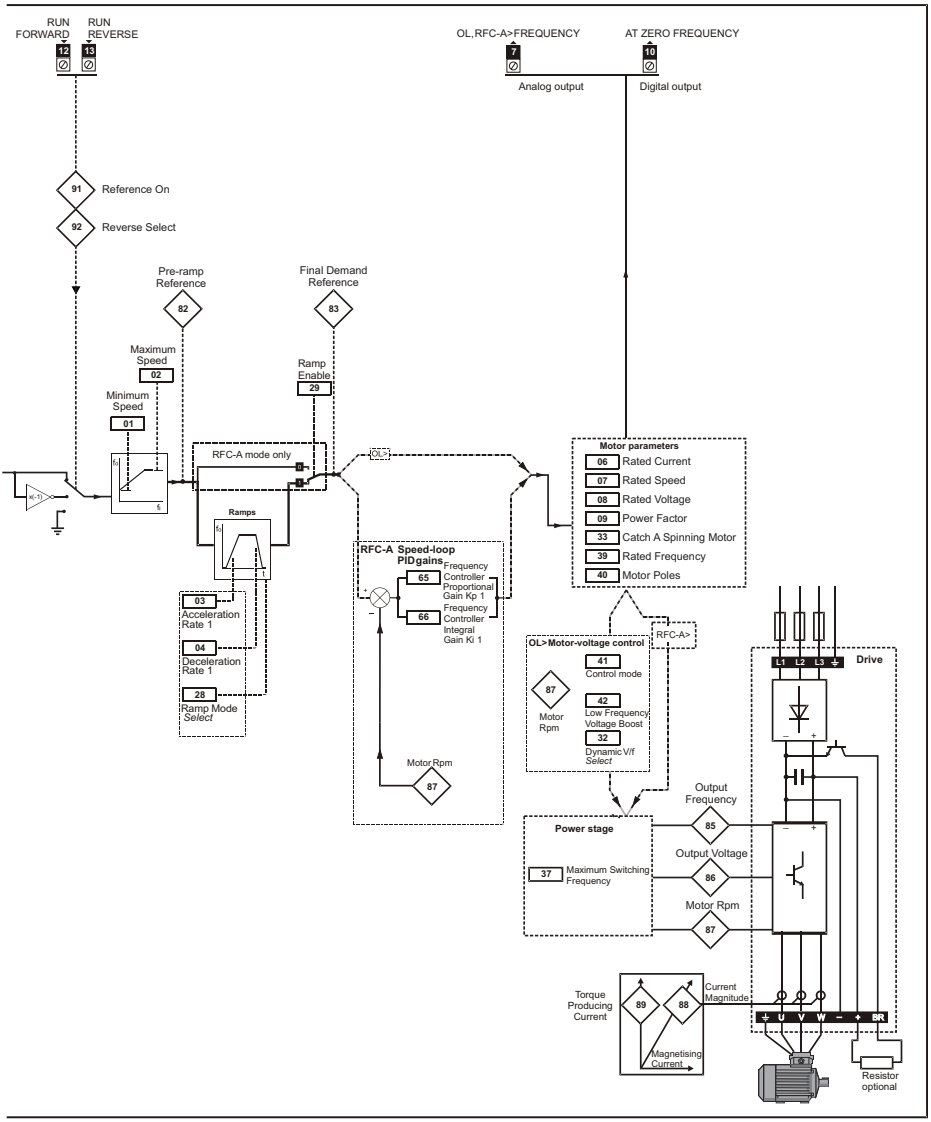
RUN FORWARD
12
RUN REVERSE
13
OL, RFC-A>FREQUENCY
7
AT ZERO FREQUENCY
10
Analog output
Digital output
91
Reference On
92
Reverse Select
Pre-ramp Reference
82
Final Demand Reference
83
Maximum Speed
02
Minimum Speed
01
Ramp Enable
29
RFC-A mode only
OL>
Ramps
03
Acceleration Rate 1
04
Deceleration Rate 1
28
Ramp Mode Select
RFC-A Speed-loop PIDgains
65
Frequency Controller Proportional Gain Kp 1
66
Frequency Controller Integral Gain Ki 1
Motor Rpm
87
Motor parameters
06
Rated Current
07
Rated Speed
08
Rated Voltage
09
Power Factor
33
Catch A Spinning Motor
39
Rated Frequency
40
Motor Poles
OL>Motor-voltage control
RFC-A>
41
Control mode
87
Motor Rpm
42
Low Frequency Voltage Boost
32
Dynamic V/f Select
Power stage
37
Maximum Switching Frequency
Output Frequency
85
Output Voltage
86
Motor Rpm
87
Drive
L1 L2 L3
U V W BR
Torque Producing Current
89
88
Current Magnitude
Magnetising Current
Resistor optional

6.2 Unidrive M200/201 parameter descriptions

Key:

RW	Read / Write	RO	Read only	Num	Number parameter	Bit	Bit parameter	Txt	Text string	Bin	Binary parameter	FI	Filtered
ND	No default value	NC	Not copied	PT	Protected parameter	RA	Rating dependent	US	User save	PS	Power-down save	DE	Destination

01		**Minimum Speed**							
RW		Num						US	
OL / **RFC-A**	⇳	0.00 to Pr **02** Hz			⇨	0.00 Hz			

Set Pr **01** at the required minimum output frequency of the drive for both directions of rotation. The drive speed reference is scaled between Pr **01** and Pr **02**. Pr **01** is a nominal value; slip compensation may cause the actual frequency to be higher. When the drive is jogging, Pr **01** has no effect.

02		**Maximum Speed**							
RW		Num						US	
OL / **RFC-A**	⇳	0.00 to 550.00 Hz			⇨	Def.50: 50.00 Hz Def.60: 60.00 Hz			

Set Pr **02** at the required maximum output frequency for both directions of rotation. The drive speed reference is scaled between Pr **01** and Pr **02**. Pr **02** is a nominal value; slip compensation may cause the actual frequency to be higher. The drive has additional over-speed protection.

03		**Acceleration Rate 1**							
RW		Num						US	
OL / **RFC-A**	⇳	0.0 to 32000.0 s/100 Hz			⇨	5.0 s/100 Hz			

Set Pr **03** at the required rate of acceleration. Note that larger values produce lower acceleration. The rate applies in both directions of rotation.

04		**Deceleration Rate 1**							
RW		Num						US	
OL / **RFC-A**	⇳	0.0 to 32000.0 s/100 Hz			⇨	10.0 s/100 Hz			

Set Pr **04** at the required rate of deceleration. Note that larger values produce lower deceleration. The rate applies in both directions of rotation.

05		Drive Configuration								
RW		Txt						PT	US	
OL	⇳	AV (0), AI (1), AV.Pr (2), AI.Pr (3), PrESEt (4), PAd (5), PAd.rEF (6), E.Pot (7), torquE (8), Pid (9)				⇨	AV (0)*			

* With Unidrive M201, the default is PAd (5).

Use Pr **05** to select the required frequency/speed reference as follows:

Value	Text	Description
0	AV	Analog input 1 (voltage) or Analog input 2 (voltage) selected by terminal (Local/Remote)
1	AI	Analog input 1 (current) or Analog input 2 (voltage) selected by terminal (Local/Remote)
2	AV.Pr	Analog input 1 (voltage) or 3 presets selected by terminal
3	AI.Pr	Analog input 1 (current) or 3 presets selected by terminal
4	PrESEt	Four presets selected by terminal
5	PAd	Keypad reference
6	PAd.rEF	Keypad reference with terminal control
7	E.Pot	Electronic Potentiometer
8	torquE	Torque mode, Analog input 1 (current frequency reference) or Analog input 2 (voltage torque reference) selected by terminal
9	Pid	PID mode, Analog input 1 (current feedback source) and Analog input 2 (voltage reference source)

NOTE A change to Pr **05** is set by pressing the ENTER button on exit from parameter edit mode. The drive must be disabled, stopped or tripped for a change to take place. If Pr **05** is changed while the drive is running, when the ENTER button is pressed on exit from parameter edit mode, Pr **05** will change back to its previous value.

NOTE When the setting of Pr **05** is changed, the appropriate drive configuration parameters are set back to their default values.

06		Motor Rated Current								
RW		Num					RA		US	
OL RFC-A	⇳	0.00 to Drive Rating A				⇨	Maximum Heavy Duty Rating A			

The rated current parameter must be set to the maximum continuous current of the motor (taken from the name plate). The motor rated current is used in the following:

- Current limits
- Motor thermal overload protection
- Vector mode voltage control
- Slip compensation
- Dynamic V/F control

07		Motor Rated Speed								
RW		Num							US	
OL	⇳	0.0 to 33000.0 rpm				⇨	Def.50: 1500.0 rpm Def.60: 1800.0 rpm			
RFC-A							Def.50: 1450.0 rpm Def.60: 1750.0rpm			

Set to the rated speed of the motor (taken from the motor name plate). The motor rated speed is used to calculate the correct slip speed for the motor.

08		Motor Rated Voltage								
RW		Num					RA		US	
OL	⇳	0 to 240 V or 0 to 480 V				⇨	110 V drive: 230 V 200 V drive: 230 V 400 V drive Def.50: 400 V 400 V drive Def.60: 460 V			
RFC-A										

The *Rated Voltage* (Pr **08**) and the *Rated Frequency* (Pr **39**) are used to define the voltage to frequency characteristic applied to the motor. The *Rated Frequency* (Pr **39**) is also used in conjunction with the *Motor Rated Speed* (Pr **07**) to calculate the rated slip for slip compensation.

09		Motor Rated Power Factor								
RW		Num					RA		US	
OL	⇳	0.00 to 1.00				⇨	0.85			
RFC-A										

Enter the motor rated power factor cos φ (taken from the motor name plate).

The drive can measure the motor rated power factor by performing a rotating autotune (see Autotune (Pr **38**).

10		User Security Status								
RW		Num				ND		PT		
OL	⇳	LEVEL.1 (0), LEVEL.2 (1), ALL (2), StAtUS (3), no.Acc (4)				⇨	LEVEL.1 (0)			
RFC-A										

This parameter controls access via the drive keypad as follows:

Value	Text	Function
0	LEVEL.1	Access to first 10 parameters in Menu 0 only.
1	LEVEL.2	Access to all parameters in Menu 0.
2	ALL	Access to all menus.
3	StAtUS	The keypad remains in status mode and no parameters can be viewed or edited.
4	no.Acc	The keypad remains in status mode and no parameters can be viewed or edited. Drive parameters cannot be accessed via a comms interface.

11		Start/Stop Logic Select							
RW	Num							US	
OL / RFC-A	⇳	0 to 6			⇨	0			

This parameter changes the functions of the input terminals which are normally associated with the enabling, starting and stopping the drive.

Pr 11	Terminal 11	Terminal 12	Terminal 13	Latching
0	Enable	Run Forward	Run Reverse	No
1	/Stop	Run Forward	Run Reverse	Yes
2	Enable	Run	Forward/Reverse	No
3	/Stop	Run	Forward/Reverse	Yes
4	/Stop	Run	Jog Forward	Yes
5	User programmable	Run Forward	Run Reverse	No
6	User programmable	User programmable	User programmable	User programmable

Action will only occur if the drive is inactive. If the drive is active, the parameter will return to its pre-altered value on exit from edit mode.

15		Jog Reference							
RW	Num							US	
OL / RFC-A	⇳	0.00 to 300.00 Hz			⇨	1.50 Hz			

Defines the reference when jog is enabled.

16		Analog Input 1 Mode							
RW	Txt							US	
OL / RFC-A	⇳	4-20.S (-6), 20-4.S (-5), 4-20.L (-4), 20-4.L (-3), 4-20.H (-2), 20-4.H (-1), 0-20 (0), 20-0 (1), 4-20.tr (2), 20-4.tr (3), 4-20 (4), 20-4 (5), Volt (6)			⇨	Volt (6)			

Defines the mode of analog input 1.

The table below gives all the possible analog input modes.

Value	Text	Function
-6	4-20.S	Stop on loss
-5	20-4.S	Stop on loss
-4	4-20.L	4-20 mA switching to equivalent of 4 mA input current on loss
-3	20-4.L	20-4 mA switching to equivalent of 20 mA input current on loss
-2	4-20.H	4-20 mA hold at level before loss on loss
-1	20-4.H	20-4 mA hold at level before loss on loss
0	0-20	0-20 mA
1	20-0	20-0 mA
2	4-20.tr	4-20 mA trip on loss
3	20-4.tr	20-4 mA trip on loss
4	4-20	4-20 mA no action on loss
5	20-4	20-4 mA no action on loss
6	Volt	Voltage

NOTE In 4-20 mA and 20-4 mA modes loss of input is detected if the current falls below 3 mA.

NOTE If both analog inputs (A1 and A2) are to be set-up as voltage inputs, and if the potentiometers are supplied from the drive's +10 V rail (terminal T4), they must have a resistance >4 kΩ each.

17		**Bipolar Reference Enable**							
RW	Bit							US	
OL / **RFC-A**	⇳	Off (0) or On (1)			⇨	Off (0)			

Pr **17** determines whether the reference is uni-polar or bi-polar. See *Minimum Speed* (Pr **01**). Allows negative speed reference in keypad mode.

18 to 21		**Preset Reference 1 to 4**							
RW	Num							US	
OL / **RFC-A**	⇳	0.00 to Pr **02** Hz			⇨	0.00 Hz			

If the preset reference has been selected (see Pr **05**), the speed at which the motor runs is determined by these parameters. See *Drive Configuration* (Pr **05**).

22		Status Mode Parameter 2								
RW		Num						PT	US	
OL	⇳	0.000 to 30.999			⇨	4.020				
RFC-A										

This parameter and *Status Mode Parameter 1* (Pr **23**) define which parameters are displayed in Status mode. The values can be alternated by pressing the Escape key, if the drive is running.

23		Status Mode Parameter 1								
RW		Num						PT	US	
OL	⇳	0.000 to 30.999			⇨	2.001				
RFC-A										

See *Status Mode Parameter 2* (Pr **22**).

24		Customer Defined Scaling								
RW		Num							US	
OL	⇳	0.000 to 10.000			⇨	1.000				
RFC-A										

This parameter defines the scaling applied to *Status Mode Parameter 1* (Pr **23**). The scaling is only applied in the Status mode.

25		User Security Code								
RW		Num				ND		PT	US	
OL	⇳	0-9999			⇨	0				
RFC-A										

If any number other than 0 is programmed into this parameter, user security can be applied so that no parameters except Pr **10** can be adjusted with the keypad. When this parameter is read via a keypad it appears as zero. Refer to the *Control User Guide* for further information.

27		Power-up Keypad Control Mode Reference								
RW		Txt							US	
OL	⇳	rESEt (0), LASt (1), PrESEt (2)			⇨	rESEt (0)				
RFC-A										

Defines which value of keypad control mode reference is displayed at power-up.

Value	Text	Description
0	rESEt	Keypad reference is zero
1	LASt	Keypad reference is the last used value
2	PrESEt	Keypad reference is copied from *Preset Reference 1* (Pr **18**)

28		Ramp Mode Select								
RW		Txt							US	
OL / RFC-A	⇳	Fast (0), Std (1), Std.bst (2), Fst.bst (3)				⇨	Std (1)			

Defines the mode used by the ramp system.

0: Fast ramp

1: Standard ramp

2: Standard ramp with motor voltage boost

3: Fast ramp with motor voltage boost

Fast ramp is linear deceleration at programmed rate, normally used when a braking resistor is installed.

Standard ramp is controlled deceleration to prevent DC bus over-voltage trips, normally used when there is no braking resistor installed.

If a high motor voltage mode is selected, deceleration rates can be faster for a given inertia but motor temperatures will be higher.

29		Ramp Enable								
RW		Bit							US	
OL / RFC-A	⇳	Off (0) or On (1)				⇨	On (1)			

Setting Pr **29** to 0 allows the user to disable the ramps. This is generally used when the drive is required to closely follow a speed reference which already contains acceleration and deceleration ramps.

30		Parameter Cloning								
RW		Txt					NC		US*	
OL / RFC-A	⇳	NonE (0), rEAd (1), Prog (2), Auto (3), boot (4)				⇨	NonE (0)			

* Only a value of 3 or 4 in this parameter is saved.

If Pr **30** is equal to 1 or 2, this value is not transferred to the EEPROM or the drive. If Pr **30** is set to a 3 or 4 the value is transferred.

Parameter string	Parameter value	Comment
NonE	0	Inactive
rEAd	1	Read parameter set from the NV Media Card
Prog	2	Programming a parameter set to the NV Media Card
Auto	3	Auto save
boot	4	Boot mode

For further information, please refer to Chapter 9 *NV Media Card Operation* on page 57.

31		Stop Mode								
RW		Txt							US	
OL	⇳	CoASt (0), rP (1), rP.dc I (2), dc I (3), td.dc I (4), dis (5)			⇨	rP (1)				
RFC-A		CoASt (0), rP (1), rP.dc I (2), dc I (3), td.dc I (4), dis (5), No.rP (6)								

Defines how the motor is controlled when the run signal is removed from the drive.

Value	Text	Description
0	CoASt	Coast stop
1	rP	Ramp stop
2	rP.dc I	Ramp stop + 1 second dc injection
3	dc I	Injection braking stop with detection of zero speed
4	td.dc I	Timed injection braking stop
5	dis	Disable
6	No.rP	No ramp (RFC-A mode only)

See the *Control User Guide* for further information.

32		Dynamic V To F Select / Flux Optimization Select								
RW		Num							US	
OL	⇳	0 to 1			⇨	0				
RFC-A										

Open-loop:

Set to 1 to enable Dynamic V to F mode in open-loop mode only.

0: Fixed linear voltage to frequency ratio (constant torque - standard load)

1: Voltage to frequency ratio dependant on load current. This gives a higher motor efficiency.

RFC-A:

If this parameter is set to 1, the flux is reduced so that the magnetizing current is equal to the torque producing current, to optimize copper losses and reduce iron losses in the motor under low load conditions.

33		Catch a Spinning Motor								
RW		Txt							US	
OL	⇳	dis (0), Enable (1), Fr.Only (2), Rv.Only (3)			⇨	dis (0)				
RFC-A										

If the drive is to be configured in fixed boost mode (Pr **41** = Fd or SrE) with catch a spinning motor software enabled, an autotune (see Pr **38** on page 41) must be carried out to measure the motor's stator resistance beforehand. If a stator resistance is not measured, the drive may trip on OV or OI.AC while trying to catch a spinning motor.

Pr 33	Text	Function
0	dis	Disabled
1	Enable	Detect all frequencies
2	Fr.Only	Detect positive frequencies only
3	Rv.Only	Detect negative frequencies only

34		Digital Input 5 Select							
RW		Txt						US	
OL RFC-A	⇳	Input (0), th.Sct (1), th (2), th.Notr (3), Fr (4)			⇨	Input (0)			

This parameter selects the function of Digital Input 5 (terminal 14).

Value	Text	Function
0	Input	Digital input
1	th.Sct	Temperature measurement input with short circuit detection (Resistance <50 Ω)
2	th	Temperature measurement input without short circuit detection but with *th* trip
3	th.Notr	Temperature measurement input with no trips
4	Fr	Frequency input

Figure 6-1 Thermistor input

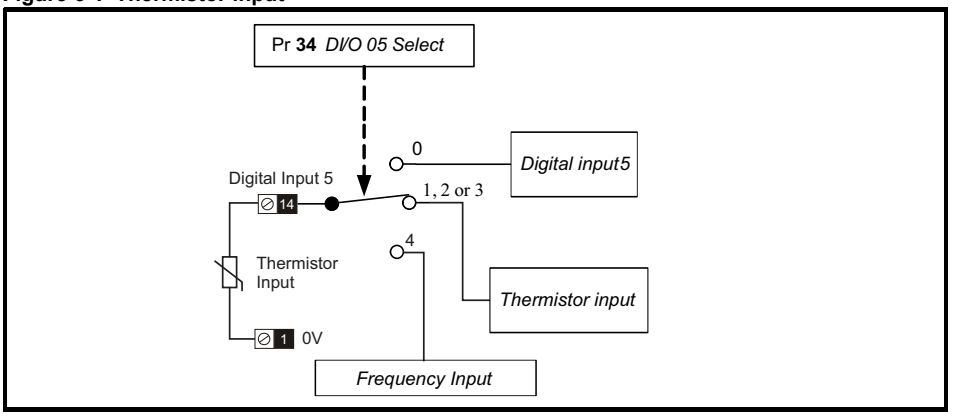

35		Digital Output 1 Control								
RW		Num							US	
OL	⇳	0 to 21			⇨	0				
RFC-A										

Defines the behaviour of digital output 1 (terminal 10).

Value	Description
0	User defined by Digital IO1 Source/Destination A
1	Drive running signal
2	Frequency arrived signal
3	Frequency level detection signal
4	Frequency level detection signal
5	Overload detection signal
6	Power off state
7	External fault stop
8	Frequency upper limit
9	Frequency lower limit
10	Drive running at zero frequency
14	Drive ready
15	Drive OK
18	Brake release
19	Torque limiting (Valid while the torque is limited by torque limiting value 1/2)
20	Forward or reverse
21	Motor 1 or 2

36		Analog Output 1 Control								
RW		Txt							US	
OL	⇳	0 to 14			⇨	0				
RFC-A										

Defines the functionality of Analog Output 1 (terminal 7).

Value	Description
0	User defined by Analog Output 1 Source A
1	Frequency output
2	Frequency reference
3	Motor speed
4	Current Magnitude
6	Torque output
7	Torque current output
8	Voltage output
9	DC bus voltage (0 to 800 V)
10	Analog Input 1
11	Analog Input 2
12	Power output (0 to 2 x Pe)
13	Torque limitation
14	Torque reference (0 to 300 %)

37		Maximum Switching Frequency							
RW		Txt						US	
OL	⇳	0.667 (0), 1 (1), 2 (2), 3 (3), 4 (4), 6 (5), 8 (6), 12 (7), 16 (8) kHz			⇨	3 (3) kHz			
RFC-A		2 (2), 3 (3), 4 (4), 6 (5), 8 (6), 12 (7), 16 (8) kHz							

Defines the maximum switching frequency that can be used by the drive.

Pr 37	Text	Description
0	0.667	667 Hz switching frequency
1	1	1 kHz switching frequency
2	2	2 kHz switching frequency
3	3	3 kHz switching frequency
4	4	4 kHz switching frequency
5	6	6 kHz switching frequency
6	8	8 kHz switching frequency
7	12	12 kHz switching frequency
8	16	16 kHz switching frequency

See the *Power Installation Guide* for drive derating data.

38		Autotune								
RW		Num					NC		US	
OL	⇳	0 to 2				⇨	0			
RFC-A		0 to 3								

Defines the auto-tune test to be performed.

There are two autotune tests available in open loop mode, a stationary and a rotating test. A rotating autotune should be used whenever possible so the measured value of power factor of the motor is used by the drive.

Open Loop and RFC-A:

1. A stationary autotune can be used when the motor is loaded and it is not possible to remove the load from the motor shaft. To perform a Stationary autotune, set Pr **38** to 1,
2. A rotating autotune should only be used if the motor is unloaded. A rotating autotune first performs a stationary autotune, as above, then a rotating test is performed in which the motor is accelerated with currently selected ramps up to a frequency of *Rated Frequency* (Pr **39**) x 2/3, and the frequency is maintained at that level for 4 seconds. To perform a Rotating autotune, set Pr **38** to 2.

RFC-A only:

3. This test measures the total inertia of the load and the motor. A series of progressively larger torque levels are applied to the motor to accelerate the motor up to 3/4 x *Motor Rated Speed* (Pr **07**) to determine the inertia from the acceleration/deceleration time.

Following the completion of an autotune test the drive will go into the inhibit state. The drive must be placed into a controlled disable condition before the drive can be made to run at the required reference. The drive can be put in to a controlled disable condition by removing the enable signal from terminal 11.



A rotating autotune will cause the motor to accelerate up to 2/3 base speed in the direction selected regardless of the reference provided. Once complete the motor will coast to a stop. The enable signal must be removed before the drive can be made to run at the required reference.The drive can be stopped at any time by removing the run signal or removing the drive enable.

39		Motor Rated Frequency								
RW		Num					RA		US	
OL	⇳	0.00 to 550.00 Hz				⇨	Def.50: 50.00 Hz Def.60: 60.00 Hz			
RFC-A										

Enter the value from the rating plate of the motor. Defines the voltage to frequency ratio applied to the motor.

40		Number Of Motor Poles								
RW		Num							US	
OL	⇳	Auto (0) to 32 (16)				⇨	Auto (0)			
RFC-A										

Set to the number of poles of the motor. The auto mode calculates the number of motor poles from the settings of Pr **07** and Pr **39**.

41		Control Mode								
RW		Txt							US	
OL	⇳	Ur.S (0), Ur (1), Fd (2), Ur.Auto (3), Ur.I (4), SrE (5), Fd.tap (6)			⇨	Ur.I (4)				
RFC-A										

Defines the drive output mode, which can either be a voltage mode or a current mode.

Value	Text	Description
0	Ur.S	Stator resistance and voltage offset measured at each start
1	Ur	No measurements
2	Fd	Fixed boost mode.
3	Ur.Auto	Stator resistance and voltage offset measured at first drive enable
4	Ur.I	Stator resistance and voltage offset measured at each power-up
5	SrE	Square law characteristic
6	Fd.tap (6)	Fixed boost with taper

NOTE The drive default setting is Ur I mode which means that the drive will carry out an autotune every time the drive is powered-up and enabled. If the load is not going to be stationary when the drive is powered-up and enabled, then one of the other modes should be selected. Not selecting another mode could result in poor motor performance or OI.AC, It.AC or OV trips.

42		Low Frequency Voltage Boost								
RW		Num							US	
OL	⇳	0.0 to 25.0 %			⇨	3.0 %				
RFC-A										

Determines the boost level when Pr **41** is set to Fd, SrE or Fd.tap modes.

43		Serial Baud Rate								
RW		Txt							US	
OL	⇳	600 (1), 1200 (2), 2400 (3), 4800 (4), 9600 (5), 19200 (6), 38400 (7), 57600 (8), 76800 (9), 115200 (10)			⇨	19200 (6)				
RFC-A										

Defines the serial baud rate of the drive.

Changing the parameters does not immediately change the serial communications settings. See *Reset Serial Communications* (Pr **45**) for more details.

44		Serial Address								
RW		Num							US	
OL RFC-A	⇳	1 to 247				⇨	1			

Used to define the unique address for the drive for the serial interface. The drive is always a slave, address 0 is used to globally address all slaves, and so this address should not be set in this parameter.

Changing the parameters does not immediately change the serial communications settings. See *Reset Serial Communications* (Pr **45**) for more details.

45		Reset Serial Communications								
RW		Bit				ND	NC		US	
OL RFC-A	⇳	Off (0) or On (1)				⇨	Off (0)			

Set to On (1) to update communications set-up.

NOTE The display will briefly display On and return to Off on reset.

46		Brake Controller Upper Current Threshold								
RW		Num							US	
OL RFC-A	⇳	0 to 200 %				⇨	50 %			

Defines the upper current threshold for the brake. See Brake Controller Brake Release in *Parameter Reference Guide*.

47		Brake Controller Lower Current Threshold								
RW		Num							US	
OL RFC-A	⇳	0 to 200 %				⇨	10 %			

Defines the lower current limit for the brake. See Brake Controller Brake Release in *Parameter Reference Guide*.

48		Brake Controller Brake Release Frequency								
RW		Num							US	
OL RFC-A	⇳	0.00 to 20.00 Hz			⇨	1.00 Hz				

Defines the Brake Release Frequency. See Brake Controller Brake Release in *Parameter Reference Guide*.

49		Brake Controller Brake Apply Frequency								
RW		Num							US	
OL RFC-A	⇳	0.00 to 20.00 Hz			⇨	2.00 Hz				

Defines the Brake Apply Frequency. See Brake Controller Brake Release in *Parameter Reference Guide*.

50		Brake Controller Brake Delay								
RW		Num							US	
OL RFC-A	⇳	0.0 to 25.0 s			⇨	1.0 s				

Defines the pre-brake release delay. See Brake Controller Brake Release in *Parameter Reference Guide*.

51		Brake Controller Post-brake Release Delay								
RW		Num							US	
OL RFC-A	⇳	0.0 to 25.0 s			⇨	1.0 s				

Defines the post-brake release delay.

53		Brake Controller Initial Direction								
RW		Txt							US	
OL RFC-A	⇳	rEF (0), For (1), rEv (2)			⇨	rEF (0)				

Defines the initial direction of the brake.

Value	Text
0	rEF
1	For
2	rEv

See Brake Controller Brake Release in *Parameter Reference Guide*.

54		Brake Controller Brake Apply Through Zero Threshold							
RW	Num							US	
OL / RFC-A	⇳	0.00 to 25.00 Hz			⇨	1.00 Hz			

Defines if the brake is applied through zero threshold. See Brake Controller Brake Release in *Parameter Reference Guide*.

55		Brake Controller Enable							
RW	Txt							US	
OL / RFC-A	⇳	diS (0), rELAy (1), dig IO (2), USEr (3)			⇨	diS (0)			

Value	Text
0	diS
1	rELAy
2	dig IO
3	USEr

If *Brake Controller Enable* (Pr **55**) = diS, the brake controller is disabled.

If *Brake Controller Enable* (Pr **55**) = rELAy, the brake controller is enabled with I/O set up to control the brake via the relay output. Drive ok is re-routed to digital I/O.

If *Brake Controller Enable* (Pr **55**) = dig IO, the brake controller is enabled with I/O set up to control the brake via digital I/O. Drive ok is routed to the relay output.

If *Brake Controller Enable* (Pr **55**) = USEr, the brake controller is enabled, but no parameters are set up to select the brake output.

56 to 58		Trip 0 to 2							
RO	Txt				ND	NC	PT	PS	
OL / RFC-A	⇳	0 to 255			⇨				

These parameters show the last 3 trips.

59		OUP Enable							
RW	Txt							US	
OL / RFC-A	⇳	Stop (0) or Run (1)			⇨	Run (1)			

Enables the onboard user program.

Onboard user programming provides a background task that loops continuously and a timed task that is executed each time at a defined rate. For further information, refer to the *Control User Guide*.

60		OUP Status								
RO		Num				ND	NC	PT		
OL	⇳	-2147483648 to 2147483647				⇨				
RFC-A										

This parameter indicates the status of the user program in the drive. For further information, refer to the *Control User Guide.*

65		Frequency Controller Proportional Gain Kp1								
RW		Num							US	
OL	⇳					⇨				
RFC-A		0.000 to 200.000 s/rad					0.100 s/rad			

Defines the proportional gain for frequency controller 1.

RFC modes only.

The controller includes a feed forward proportional gain (Kp), a feed forward integral gain (Ki), and a differential feedback gain (Kd).

Proportional gain (Kp)

If Kp is non-zero and Ki is zero the controller will only have a proportional term, and there must be a frequency error to produce a torque reference. Therefore as the motor load increases there will be a difference between the reference and actual frequencies.

Integral gain (Ki)

The integral gain is provided to prevent frequency regulation. The error is accumulated over a period of time and used to produce the necessary torque reference without any frequency error. Increasing the integral gain reduces the time taken for the frequency to reach the correct level and increases the stiffness of the system, i.e. it reduces the positional displacement produced by applying a load torque to the motor.

66		Frequency Controller Integral Gain Ki1								
RW		Num							US	
OL	⇳					⇨				
RFC-A		0.00 to 655.35 s^2/rad					0.10 s^2/rad			

Defines the integral gain for frequency controller 1. See *Frequency Controller Proportional Gain Kp1* (Pr **65**).

67		Sensorless Mode Filter								
RW		Txt							US	
OL	⇳					⇨				
RFC-A		4 (0), 5 (1), 6 (2), 8 (3), 12 (4), 20 (5) ms					4 (0) ms			

Defines the time constant for the filter applied to the output of the frequency estimator system.

69		Spin Start Boost								
RW		Num							US	
OL RFC-A	⇳	0.0 to 10.0			⇨	1.0				

Spin Start Boost (Pr **69**) is used by the algorithm that detects the frequency of a spinning motor when the drive is enabled and *Catch A Spinning Motor* (Pr **33**) ≥ 1. For smaller motors the default value of 1.0 is suitable, but for larger motors, *Spin Start Boost* (Pr **69**) may need to be increased.

If *Spin Start Boost* (Pr **69**) is too small the drive will detect zero frequency, whatever the frequency of the motor, and if *Spin Start Boost* (Pr **69**) is too large, the motor may accelerate away from standstill when the drive is enabled.

70		PID1 Output								
RO		Num				ND	NC	PT		
OL RFC-A	⇳	±100.00 %			⇨					

This parameter is the output of the PID controller. For further information, refer to the *Parameter Reference Guide.*

71		PID1 Proportional Gain								
RW		Num							US	
OL RFC-A	⇳	0.000 to 4.000			⇨	1.000				

Proportional gain applied to the PID error. For further information, refer to the *Parameter Reference Guide.*

72		PID1 Integral Gain								
RW		Num							US	
OL RFC-A	⇳	0.000 to 4.000			⇨	0.500				

Integral gain applied to the PID error. For further information, refer to the *Parameter Reference Guide.*

73		PID1 Feedback Invert								
RW		Bit							US	
OL RFC-A	⇳	Off (0) or On (1)			⇨	Off (0)				

This parameter allows the PID feedback source to be inverted. For further information, refer to the *Parameter Reference Guide.*

74		PID1 Output Upper Limit								
RW		Num							US	
OL RFC-A	⇳	0.00 to 100.00 %			⇨	100.00 %				

This parameter with *PID1 Output Lower Limit* (Pr **75**) allows the output to be limited to a range. For further information, refer to the *Parameter Reference Guide.*

75		PID1 Output Lower Limit								
RW		Num							US	
OL RFC-A	⇳	±100.00 %			⇨	-100.00 %				

See *PID1 Output Upper Limit* (Pr **74**).

76		Action On Trip Detection								
RW		Num				ND	NC	PT	US	
OL RFC-A	⇳	0 - 31			⇨	0				

Bit 0: Stop on defined non-important trips

Bit 1: Disable braking resistor overload detection

Bit 2: Disable phase loss stop

Bit 3: Disable braking resistor temperature monitoring

Bit 4: Disable parameter freeze on trip. Refer to *Parameter Reference Guide.*

77		Maximum Heavy Duty Rating								
RO		Num				ND	NC	PT		
OL RFC-A	⇳	0.00 to Drive HD Current Rating A			⇨					

Displays the maximum heavy duty current rating of the drive.

78		Software Version								
RO		Num				ND	NC	PT		
OL RFC-A	⇳	0 to 99.99.99			⇨					

Displays the software version in the drive.

79		User Drive Mode								
RW		Txt				ND	NC	PT	US	
OL RFC-A	⇳	OPEn.LP (1), RFC-A (2)				⇨	OPEn.LP (1) RFC-A (2)			

Defines the mode of the drive.

81		Reference Selected								
RO		Num				ND	NC	PT		
OL RFC-A	⇳	-Pr **02** to Pr **02** or Pr **01** to Pr **02** Hz				⇨				

This is the basic reference selected from the available sources.

82		Pre-ramp Reference								
RO		Num				ND	NC	PT		
OL RFC-A	⇳	-Pr **02** to Pr **02** or Pr **01** to Pr **02** Hz				⇨				

The *Pre-ramp Reference* is the final output from the reference system that is fed into the ramp system.

83		Final Demand Reference								
RO		Num				ND	NC	PT	FI	
OL RFC-A	⇳	-Pr **02** to Pr **02** or Pr **01** to Pr **02** Hz				⇨				

Open loop mode:

Final Demand Reference shows the fundamental drive output frequency from the *Post Ramp Reference* and the *Hard Frequency Reference*.

RFC mode:

Final Demand Reference shows the reference at the input to the frequency controller, which is the sum of the *Post Ramp Reference*, if the ramp output is not disabled and the hard frequency reference (if enabled). If the drive is disabled *Final Demand Reference* shows 0.00.

84		D.C. Bus Voltage								
RO		Num				ND	NC	PT	FI	
OL RFC-A	⇳	0 to 415 V or 0 to 830 V				⇨				

Voltage across the internal DC bus of the drive.

85		Output Frequency								
RO		Num				ND	NC	PT	FI	
OL RFC-A	⇳	± 550.00 Hz				⇨				

Open loop mode:

The *Output Frequency* is the sum of the *Post Ramp Reference* and the motor slip compensation frequency.

RFC-A mode:

The output frequency is not controlled directly, but the *Output Frequency* is a measurement of the frequency applied to the motor.

86		Output Voltage								
RO		Num				ND	NC	PT	FI	
OL RFC-A	⇳	0 to 325 V or 0 to 650 V				⇨				

The *Output Voltage* is the rms line to line voltage at the AC terminals of the drive.

87		Motor Rpm								
RO		Num				ND	NC	PT	FI	
OL RFC-A	⇳	±33000.0 rpm				⇨				

Motor Rpm = 60 x Frequency / Pole pairs

where

Pole pairs = the numeric value of *Number Of Motor Poles* (Pr **40**) (i.e. 3 for a 6 pole motor)

The frequency used to derive the *Motor Rpm* is the *Final Demand Reference* (Pr **83**).

88		Current Magnitude								
RO		Num				ND	NC	PT	FI	
OL RFC-A	⇳	0 to Drive Maximum Current A				⇨				

Current Magnitude is the instantaneous drive output current scaled so that it represents the r.m.s. phase current in Amps under steady state conditions.

89		Torque Producing Current								
RO		Num				ND	NC	PT	FI	
OL RFC-A	⇳	± Drive Maximum Current A				⇨				

Torque Producing Current is the instantaneous level of torque producing current scaled so that it represents the r.m.s. level of torque producing current under steady state conditions.

90		Digital I/O Read Word								
RO		Bin				ND	NC	PT		
OL RFC-A	⇳	0 to 2047				⇨				

Digital I/O Read Word reflects the state of digital inputs/outputs 1 to 5 and the relay.

91		Reference On								
RO		Bit				ND	NC	PT		
OL RFC-A	⇳	Off (0) or On (1)				⇨				

Reference On, which is controlled by the drive sequencer, indicates that the reference from the reference system is active.

92		Reverse Select								
RO		Bit				ND	NC	PT		
OL RFC-A	⇳	Off (0) or On (1)				⇨				

Reverse Select, which is controlled by the drive sequencer, is used to invert *Reference Selected* (Pr **81**) or the *Jog Reference* (Pr **15**).

93		Jog Select								
RO		Bit				ND	NC	PT		
OL RFC-A	⇳	Off (0) or On (1)				⇨				

Jog Select, which is controlled by the drive sequencer, is used to select the *Jog Reference* (Pr **15**).

94		Analog Input 1								
RO		Num				ND	NC	PT	FI	
OL RFC-A	⇳	±100.00 %				⇨				

This parameter displays the level of the analog signal present at analog input 1 (terminal 2).

95		Analog Input 2								
RO		Num				ND	NC	PT	FI	
OL RFC-A	⇳	±100.00 %				⇨				

This parameter displays the level of the analog signal present at analog input 2 (terminal 5).

7 Running the motor

This section takes a new user through all the essential steps to running a motor for the first time.

Table 7-1 Open Loop and RFC-A

Action	Detail	
Before power up	Ensure: • The drive enable signal is not given, terminal 11 is open • The run signal is not given, terminal 12/13 is open • The motor is connected to the drive • The motor connection is correct for the drive Δ or Y • The correct supply voltage is connected to the drive	
Power up the drive	The default setting is Open Loop vector mode. For RFC-A mode set Pr **79** to RFC-A, then press the stop/reset button to save the parameters. Ensure: • The drive displays: inh (enable terminal(s) is open)	
Enter minimum and maximum speeds	Enter: • Minimum speed Pr **01** (Hz) • Maximum speed Pr **02** (Hz)	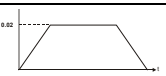
Enter accel and decel rates	Enter: • Acceleration rate Pr **03** (s/100 Hz) • Deceleration rate Pr **04** (s/100 Hz)	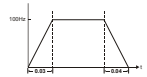
Enter motor nameplate details	❶ Motor rated current in Pr **06** (Amps) ❷ Motor rated speed in Pr **07** (rpm / min^{-1}) ❸ Motor rated voltage in Pr **08** (Volts) ❹ Motor rated power factor in (cos ϕ) Pr **09**	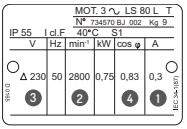
Ready to autotune		
Autotune	The drive is able to perform either a stationary or a rotating autotune. The motor must be at a standstill before an autotune is enabled. To perform an autotune: • Set Pr **38** = 1 for a stationary autotune or set Pr **38** = 2 for a rotating autotune • Close the drive enable signal (apply +24 V to terminal 11). The drive will display 'rdy'. • Give a Run command (apply +24 V to terminal 12 - Run forward or terminal 13 - Run reverse on Unidrive M200; press keypad Start button on M201). The display will flash 'tuning' while the drive is performing the autotune. • Wait for the drive to display 'inh' and for the motor to come to a standstill. • Remove the drive enable and run signal from the drive.	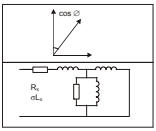
Autotune complete	When the autotune has been completed, Pr **38** will be set to 0	
Tuning of frequency controller gains (RFC-A mode only)	Depending on the application, the frequency controller gains (Pr **65** and Pr **66**) may need to be adjusted.	
Save parameters		
Save parameters	Select 'SAVE' in Pr **00** or Pr **mm.000** (alternatively enter a value of 1001) and press the Stop / Reset button to save parameters.	

Action	Detail	
Ready to run		
Run	The drive is now ready to run the motor.Close the Run Forward or Run Reverse terminals on Unidrive M200; press keypad Start button on M201.	
Increasing and decreasing speed	Changing the selected Analog frequency reference (*Speed Ref Potentiometer* on M201) will increase and decrease the speed of the motor.	
Stopping	To stop the motor by following the selected deceleration rate, open either the run forward or run reverse terminal on Unidrive M200; press keypad Stop button on M201. If the enable terminal is opened while the motor is running, the drive output is immediately disabled and the motor will coast to a stop.	

8 Diagnostics



Users must not attempt to repair a drive if it is faulty, nor carry out fault diagnosis other than through the use of the diagnostic features described in this chapter.
If a drive is faulty, it must be returned to the supplier of the drive for repair.

Table 8-1 Trip indications

Trip code	Condition	Description
C.Acc	NV Media Card Write fail	Unable to access the NV Media Card.
C.by	NV Media Card cannot be accessed as it is being accessed by an option module	An attempt has been made to access a file on NV Media Card, but the NV Media Card is already being accessed by an option module. No data is transferred.
C.cPr	NV Media Card file/data is different to the one in the drive	A *C.cPr* trip is initiated if the parameters on the NV Media Card are different to the drive.
C.d.E	NV Media Card data location already contains data	Attempt has been made to store data on a NV Media Card in a data block which already contains data.
C.dAt	NV Media Card data not found	Attempt has been made to access non-existent file or block on the NV Media Card.
C.Err	NV Media Card data structure error	Attempt has been made to access the NV Media Card but an error has been detected in the data structure on the card. Resetting the trip will cause the drive to erase and create the correct folder structure.
C.FuL	NV Media Card full	There is not enough space left on the card.
C.OPt	NV Media Card trip; option modules installed are different between source drive and destination drive	The parameter data or default difference data is being transferred from the NV Media Card to the drive, but the option module category is different between the source and destination drives.
C.Pr	NV Media Card data blocks are not compatible with the drive derivative	If Drive Derivative is different between the source and target drives. Refer to the *Control User Guide*.
C.rdo	NV Media Card has the Read Only bit set	Attempt has been made to modify a read-only NV Media Card or a read-only data block.
C.rtg	NV Media Card Trip; The voltage and / or current rating of the source and destination drives are different	The current and / or voltage ratings are different between source and destination drives.
C.SL	NV Media Card trip; Option module file transfer has failed	The *C.SL* trip is initiated, if the transfer of an option module file to or from a module failed because the option module does not respond correctly.
C.tyP	NV Media Card parameter set not compatible with current drive mode	The drive mode in the data block on the NV Media Card is different from the current drive mode.

Trip code	Condition	Description
cL.A1	Analog input 1 current loss	Current loss was detected in current mode on Analog input 1 (Terminal 2).
CL.bt	Trip initiated from the *Control Word*	Initiated by setting bit 12 on the control word when the control word is enabled. Refer to the *Parameter Reference Guide*
Cur.c	Current calibration range	Current calibration range error.
Cur.O	Current feedback offset error	Current offset is too large to be trimmed.
d.Ch	Drive parameters are being changed	A user action or a file system write is active that is changing the drive parameters and the drive has been commanded to enable.
dEr.E	Derivative file error	Contact the supplier of the drive.
dEr.I	Derivative product image error	Contact the supplier of the drive
dESt	Two or more parameters are writing to the same destination parameter	The *dESt* trip indicates that destination output parameters of two or more logic functions within the drive are writing to the same parameter.
dr.CF	Drive configuration	Contact the supplier of the drive.
EEF	Default parameters have been loaded	The *EEF* trip indicates that default parameters have been loaded. The exact cause/reason of the trip can be identified from the sub-trip number (Refer to the *Control User Guide*).
Et	An External trip is initiated	The cause of the trip can be identified from the sub trip number displayed after the trip string. **Sub-trip** / **Reason** 1 / *External Trip* = 1 Refer to the *Control User Guide*.
FAn.F	Fan fail	Indicates the fan or fan circuitry has failed
Fi.Ch	File changed	A file has been changed, power cycle to clear the trip
FI.In	Firmware Incompatibility	The user firmware is incompatible with the power firmware.
HFxx trip	Hardware faults	Internal drive hardware fault (Refer to the *Control User Guide*).
It.Ac	Output current overload timed out (I^2t)	The *It.Ac* trip indicates a motor thermal overload based on the output current and motor thermal time constant. The drive will trip on *It.Ac* when the accumulator gets to 100 %. This can occur when: • There is excessive mechanical load • Ensure the load is not jammed / sticking • Check the load on the motor has not changed • Ensure the motor rated current is not zero
It.br	Braking resistor overload timed out (I^2t)	Braking resistor overload has timed out. This can be caused by excessive braking resistor energy.
no.PS	No power board	No communication between the power and control boards.
O.Ld1	Digital output overload	The total current drawn from the AI-Adaptor 24 V supply or from the digital output has exceeded the limit.
O.SPd	Motor frequency has exceeded the over frequency threshold	Excessive motor speed (typically caused by mechanical load driving the motor).
Oh.dc	DC bus over temperature	DC bus component over temperature based on a software thermal model.
Oht.C	Control stage over-temperature	Control stage over-temperature detected.
Oht.I	Inverter over temperature based on thermal model	IGBT junction over-temperature has been detected based on a software thermal model.
Oht.P	Power stage over temperature	This trip indicates that a power stage over-temperature has been detected.
OI.A1	Analog input 1 over-current	Current input on analog input 1 exceeds 24 mA.

Trip code	Condition	Description
OI.AC	Instantaneous output over current detected	The instantaneous drive output current has exceeded.The set limit. Possible solutions: • Increase acceleration/deceleration rate • If seen during autotune reduce the voltage boost • Check for short circuit on the output cabling • Check integrity of the motor insulation using an insulation tester • Is the motor cable length within limits for the frame size • Reduce the values in the current loop gain parameters
OI.br	Braking IGBT over current detected: short circuit protection for the braking IGBT activated	Over current has been detected in braking IGBT or braking IGBT protection has been activated. Possible cause: • Check brake resistor wiring • Check braking resistor value is greater than or equal to the minimum resistance value • Check braking resistor insulation
OI.SC	Output phase short-circuit	Over-current detected on drive output when enabled.
Out.P	Output phase loss detected	Phase loss has been detected at the drive output.
OV	DC bus voltage has exceeded the peak level or maximum continuous level for 15 seconds	The *OV* trip indicates that the DC bus voltage has exceeded the maximum limit. Possible solutions: • Increase *Deceleration Rate 1* (Pr **04**) • Decrease the braking resistor value (staying above the minimum value) • Check nominal AC supply level • Check for supply disturbances which could cause the DC bus to rise • Check motor insulation using a insulation tester
P.dAt	Power system configuration data error	Contact the supplier of the drive.
PAd	Keypad has been removed	The *PAd* trip indicates that the drive is in keypad mode and the keypad has been disconnected from the drive.
Pb.bt	Power board is in bootloader mode	Power board is in bootloader mode
Pb.Er	Communication has been lost / errors detected between power control	Communications loss between power and control.
Pb.HF	Power board HF	Power processor hardware fault - contact the supplier of the drive
Pd.S	Power down save error	Error has been detected in the power down save parameters saved in non-volatile memory.
PH.Lo	Supply phase loss	The drive has detected an input phase loss or large supply imbalance.
PSU	Internal power supply fault	One or more internal power supply rails are outside limits or overloaded.
r.All	RAM allocation error	Option module derivative image has requested more parameter RAM than is allowed.
r.b.ht	Hot rectifier/brake	Over-temperature detected on input rectifier or braking IGBT.
rS	Measured resistance has exceeded the parameter range	The measured stator resistance during an autotune test has exceeded the maximum possible value of *Stator Resistance*. Refer to the *Control User Guide*.
SCL	Control word watchdog has timed out	The control word has been enabled and has timed out
SL.dF	Option module in option slot 1 has changed	Option slot 1 on the drive is a different type to that installed when parameters were last saved on the drive.

<table>
<tr><th>Trip code</th><th>Condition</th><th>Description</th></tr>
<tr><td>SL.Er</td><td>Option module in option slot 1 has detected a fault</td><td>Option module in option slot 1 on the drive has detected an error.</td></tr>
<tr><td>SL.HF</td><td>Option module 1 hardware fault</td><td>Option slot 1 on the drive has indicated a hardware fault.</td></tr>
<tr><td>SL.nF</td><td>Option module in option slot 1 has been removed</td><td>The option module in option slot 1 on the drive has been removed since the last power up.</td></tr>
<tr><td>SL.tO</td><td>Option module watchdog function service error</td><td>The option module installed in Slot 1 has started the option watchdog function and then failed to service the watchdog correctly.</td></tr>
<tr><td>So.St</td><td>Soft start relay failed to close, soft start monitor failed</td><td>Soft start relay in the drive failed to close or the soft start monitoring circuit has failed.</td></tr>
<tr><td>St.HF</td><td>Hardware trip has occurred during last power down</td><td>Hardware trip (HF01 –HF19) has occurred and the drive has been power cycled. Enter 1299 to Pr 00 or xx.000 to clear trip</td></tr>
<tr><td>Sto</td><td>No Safe Torque Off board fitted</td><td>Internal STO board not fitted correctly.</td></tr>
<tr><td>th</td><td>Motor thermistor over-temperature</td><td>The motor thermistor connected to terminal 14 (digital input 5) on the control connections has indicated a motor over temperature.</td></tr>
<tr><td>th.br</td><td>Brake resistor over temperature</td><td>The th.br trip is initiated if the hardware based braking resistor thermal monitoring is connected and the resistor overheats.</td></tr>
<tr><td>tH.Fb</td><td>Internal thermistor has failed</td><td>Internal thermistor has failed.</td></tr>
<tr><td>thS</td><td>Motor thermistor short circuit</td><td>The motor thermistor connected to terminal 14 (digital input 5) on the control connections, is short circuit or low impedance (<50 Ω).</td></tr>
<tr><td>tun.S</td><td>Autotune test stopped before completion</td><td>The drive was prevented from completing an autotune test, because either the drive enable or the drive run signals were removed.</td></tr>
<tr><td>tun.1</td><td>Autotune 1</td><td>The drive has tripped during a rotating autotune. The cause of the trip can be identified from the sub-trip number.
<table><tr><th>Sub-trip</th><th>Reason</th></tr><tr><td>2</td><td>The motor did not reach the required speed during rotating auto-tune or mechanical load measurement.</td></tr></table>Refer to the Control User Guide.</td></tr>
<tr><td>tun.3</td><td>Autotune 3</td><td>RFC-A mode only.
The drive has tripped during a rotating auto-tune or mechanical load measurement. The cause of the trip can be identified from the associated sub-trip number.
<table><tr><th>Sub-trip</th><th>Reason</th></tr><tr><td>1</td><td>Measured inertia has exceeded the parameter range during a mechanical load measurement.</td></tr><tr><td>3</td><td>The mechanical load test has been unable to identify the motor inertia</td></tr></table>Refer to the Control User Guide.</td></tr>
<tr><td>U.OI</td><td>User OI ac</td><td>The U.OI trip is initiated if the output current of the drive exceeds the trip level set by User Over Current Trip Level. Refer to the Control User Guide.</td></tr>
<tr><td>U.S</td><td>User Save error / not completed</td><td>The U.S trip indicates that an error has been detected in the user save parameters saved in non-volatile memory.</td></tr>
<tr><td>UP.uS</td><td>User Program trip</td><td>This trip can be initiated from within an onboard user program. Refer to the Control User Guide.</td></tr>
<tr><td>UPrG</td><td>User Program</td><td>An error has been detected in the onboard user program image. Refer to the Control User Guide.</td></tr>
</table>

8.1 Alarm indications

In any mode, an alarm is an indication given on the display by alternating the alarm string with the drive status string display. If an action is not taken to eliminate any alarm except "tuning", the drive may eventually trip. Alarms are not displayed when a parameter is being edited.

Table 8-2 Alarm indications

Alarm string	Description
br.res	Brake resistor overload. *Braking Resistor Thermal Accumulator* in the drive has reached 75.0 % of the value at which the drive will trip.Refer to the **Power Installation Guide**.
OV.Ld	*Motor Protection Accumulator* in the drive has reached 75.0 % of the value at which the drive will trip and the load on the drive is >100 %, reduce motor current (load). Refer to the *Parameter Reference Guide*
d.OV.Ld	Drive over temperature. *Percentage Of Drive Thermal Trip Level* in the drive is greater than 90 %. Refer to the *Parameter Reference Guide*
tuning	The autotune procedure has been initialized and an autotune in progress.
LS	Limit switch active. Indicates that a limit switch is active and that is causing the motor to be stopped
Lo.AC	Low voltage mode. See *Low AC Alarm* in the *Control User Guide*
I.AC.Lt	Current limit active. See *Current Limit Active* in the *Control User Guide*
24.LoSt	24V backup not present. See *24V Alarm Loss Enable* in the *Control User Guide*

9 NV Media Card Operation

Figure 9-1 Installing the AI-Backup adaptor (SD Card)

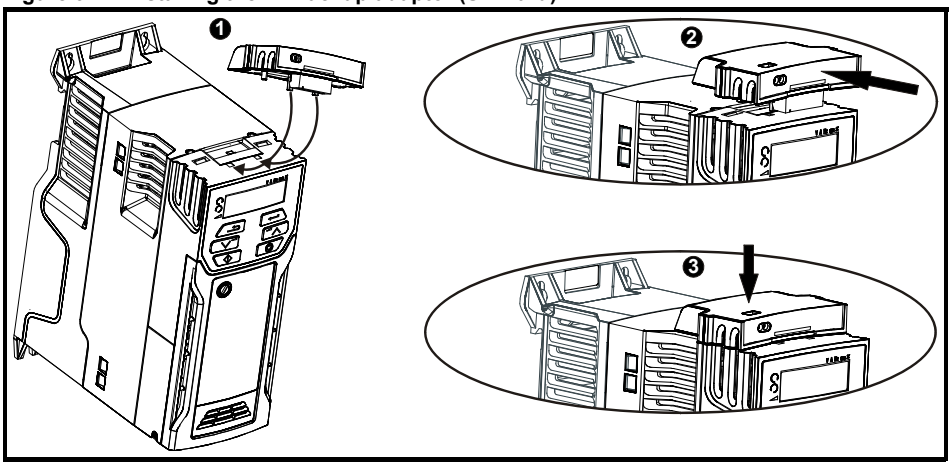

1. Identify the two plastic fingers on the underside of the AI-Backup Adaptor (1) - then insert the two fingers into the corresponding slots in the spring-loaded sliding cover on the top of the drive.
2. Hold the adaptor firmly and push the spring loaded protective cover towards the back of the drive to expose the connector block (2) below.

Press the adaptor downwards (3) until the adaptor connector locates into the drive connection below.

Figure 9-2 Basic NV Media Card operation

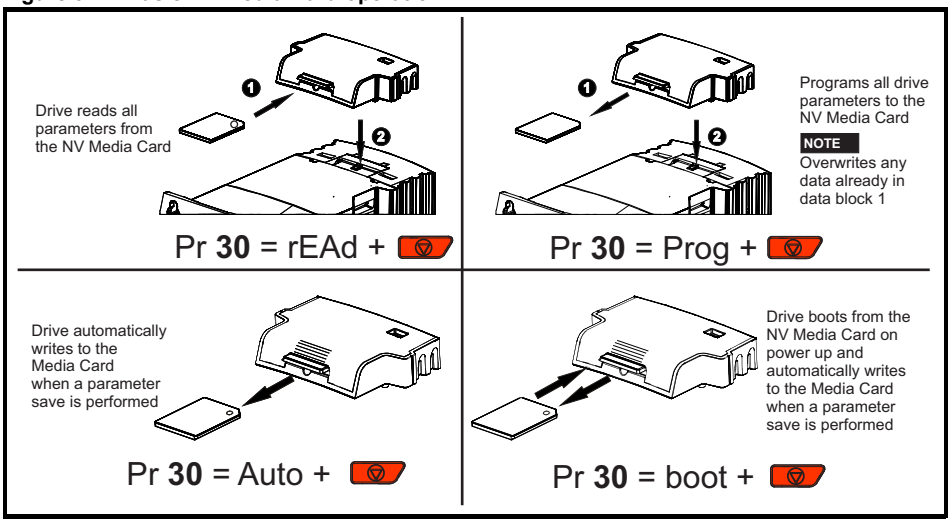

The whole card may be protected from writing or erasing by setting the read-only flag, refer to the *Control User Guide* for further information. The card should not be removed during data transfer, as the drive will produce a trip. If this occurs then either the transfer should be re-attempted or in the case of a card to drive transfer, default parameters should be loaded.

NOTE

The drive supports SD cards formatted with the FAT32 file system only.

10 Machine Control Studio

Machine Control Studio programming software powered by CODESYS

Machine Control Studio software provides a flexible and intuitive environment for programming Unidrive M's new automation and motion control features. This new software offers programming for the Unidrive M200's onboard PLC (not available on Unidrive M201).

Machine Control Studio is powered by CODESYS, the leading open software for programmable machine control. The programming environment is fully EN/IEC 61131-3 compliant, meaning that it is familiar and therefore fast and easy to use for control engineers around the world.

The following EN/IEC 61131-3 programming languages are supported:

- Structured Text (ST)
- Function Block Diagram (FBD)
- Structured Function Chart (SFC)
- Ladder Diagram (LD)
- Instruction List (IL)

Also supported:

- Continuous Function Chart (CFC)

Onboard intelligence

- Programmable Logic Control (PLC) - memory: 12 kB
- 1 x Real-time task (16 ms), 1 x Background task

Intuitive IntelliSense functionality helps to write consistent and robust programming, speeding up software development. Programmers have access to a vibrant open-source community for function blocks. Machine Control Studio supports customers' own function block libraries, with on-line monitoring of program variables with user defined watch windows and help for on-line change of program, in line with current PLC practices.

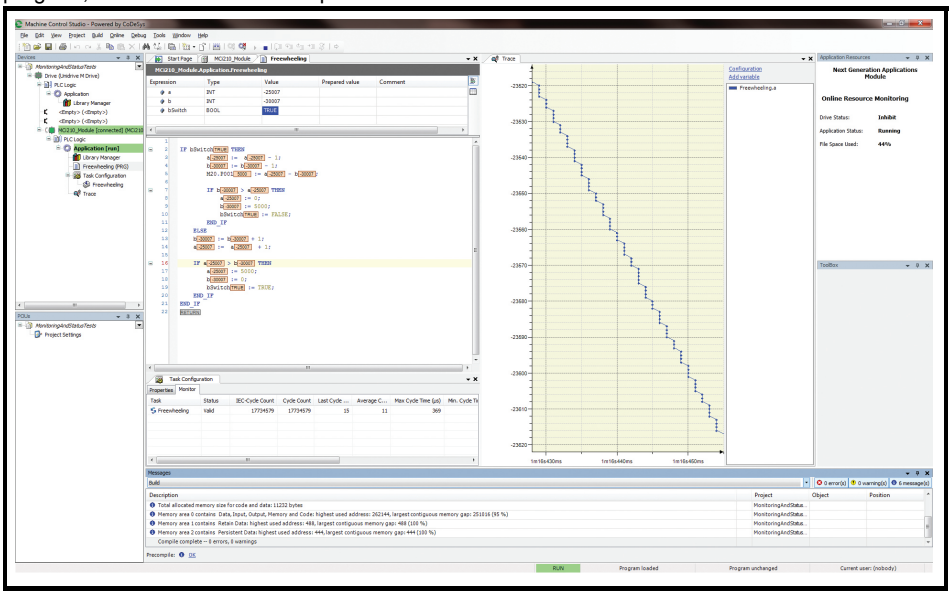

Download Machine Control Studio from: **www.drive-setup.com.**

11 UL listing information

11.1 UL file reference

All models are UL Listed to both Canadian and US requirements. The UL file reference is: NMMS/7.E171230.

11.2 Option modules, kits and accessories

Option Modules, Control Pods, Installation Kits and other accessories for use with these drives are UL Listed.

11.3 Enclosure ratings

All models are Open Type as supplied.

The drive enclosure is not classified as a fire enclosure. A separate fire enclosure must be provided.
A UL/ NEMA Type 12 enclosure is suitable.
When fitted with a conduit box the drives meet the requirements for UL Type 1. Type 1 enclosures are intended for indoor use, primarily to provide a degree of protection against limited amounts of falling dirt.
Remote Keypads are UL Type 12 when installed with the sealing washer and fixing kit provided.
When installed in a Type 1 or Type 12 enclosure, the drives may be operated in a compartment handling conditioned air.

11.4 Mounting

Drives may be surface mounted using the appropriate brackets. Drives may be mounted singly or side by side with suitable space between them (bookcase mounting).

11.5 Environment

Drives must be installed in a Pollution Degree 2 environment or better (dry, non-conductive pollution only).
The drives have been evaluated for use at ambient temperatures up to 40 °C. The drives have additionally been evaluated for 50 °C and 55 °C ambient air temperatures with a derated output.

11.6 Electrical Installation

OVERVOLTAGE CATEGORY

OVC III

SUPPLY

The drives are suitable for use on a circuit capable of delivering not more than 100,000 RMS symmetrical amperes, 600 Volts AC Maximum.

TERMINAL TORQUE

Terminals must be tightened to the rated torque as specified in the Installation Instructions.

WIRING TERMINALS

Drives must be installed using cables rated for 75 °C operation, copper wire only.
Where possible, UL Listed closed-loop connectors sized according to the field wiring shall be used for all field power wiring connections.

GROUND CONNECTION INSTRUCTIONS

UL Listed closed-loop connectors sized according to the field wiring shall be used for grounding connections.

BRANCH CIRCUIT PROTECTION
The fuses and circuit breakers required for branch circuit protection are specified in the Installation Instructions.

OPENING OF BRANCH CIRCUIT
Opening of the branch-circuit protective device may be an indication that a fault has been interrupted. To reduce the risk of fire or electric shock, the equipment should be examined and replaced if damaged. If burnout of the current element of an overload relay occurs, the complete overload relay must be replaced.

Integral solid state short circuit protection does not provide branch circuit protection. Branch circuit protection must be provided in accordance with the National Electrical Code (NEC), The Canadian Electrical Code, and any additional local codes.

DYNAMIC BRAKING
M100, M101, M200, M201, M300 or M400, frame sizes 1 to 4 have been evaluated for dynamic braking applications. Other drive models have not been evaluated for dynamic braking.

11.7 Motor overload protection and thermal memory retention

All drives incorporate internal overload protection for the motor load that does not require the use of an external or remote overload protection device.

The protection level is adjustable and the method of adjustment is provided in the *Control User Guide*. Maximum current overload is dependent on the values entered into the current limit parameters (motoring current limit, regenerative current limit and symmetrical current limit entered as percentage) and the motor rated current parameter (entered in amperes).

The duration of the overload is dependent on motor thermal time constant. The maximum programmable time constant depends on the drive model. The method of adjustment of the overload protection is provided.

The drives are provided with user terminals that can be connected to a motor thermistor to protect the motor from high temperature, in the event of a motor cooling fan failure.

11.8 External Class 2 supply

The external power supply used to power the 24 V control circuit shall be marked: “UL Class 2”. The power supply voltage shall not exceed 24 Vdc.

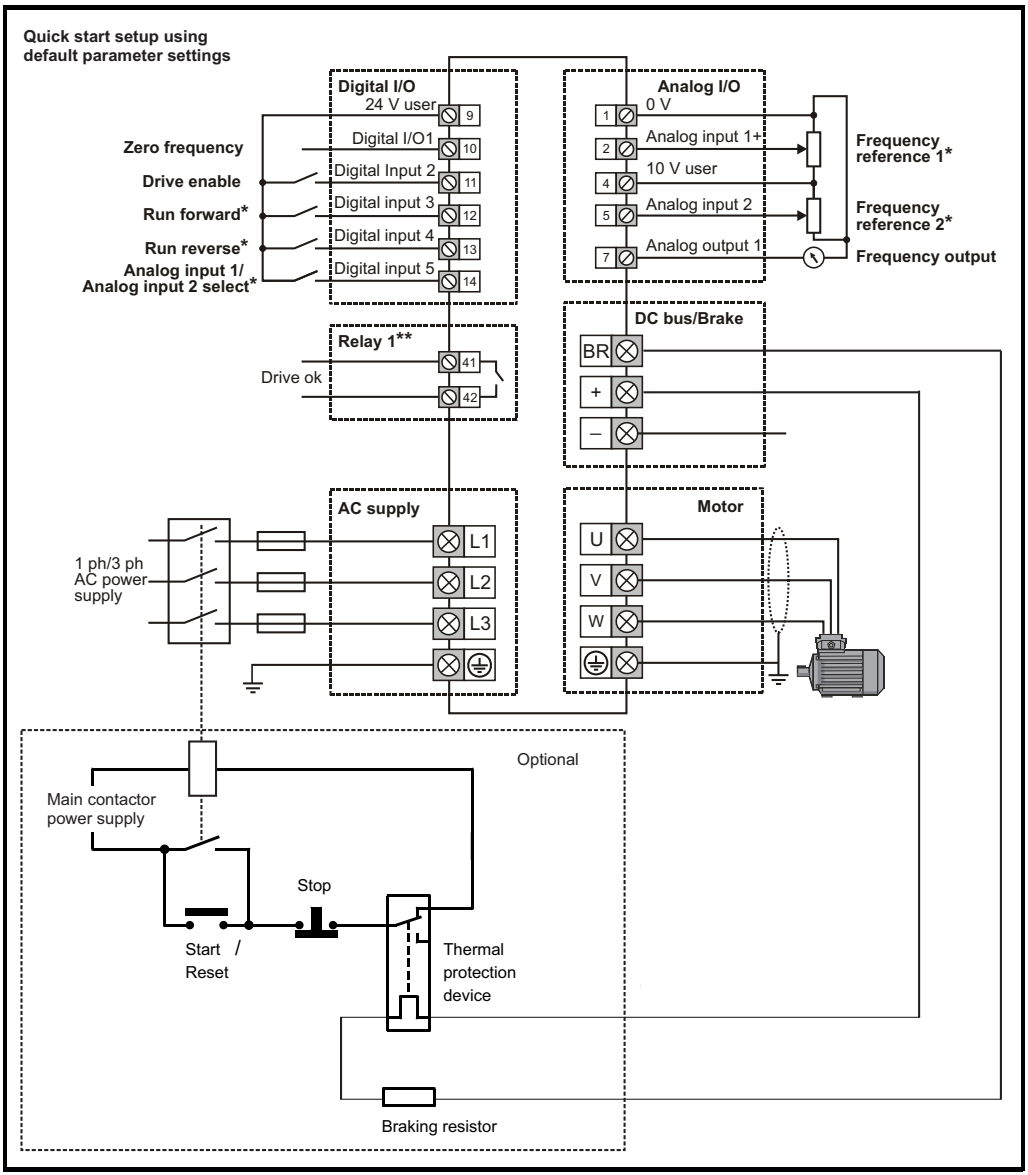

NOTE On the size 2 110 V drives or when connecting single phase to a dual rated 200 V unit, the supply should be connected to L1 and L3.

* Not required on Unidrive M201 since the Speed ref potentiometer is already on the product. The Run/Stop commands are given from the keypad and if reverse direction is needed, the user should set Pr **17** to On.

** 250 Vac maximum (UL class 1).

0478-0038-08