COPELAND

DIGITAL CONTROLLER WITH DEFROST AND FANS MANAGEMENT

XR06CH

FW 1.1

1. GENERAL WARNINGS

1.1 PLEASE READ BEFORE USING THIS MANUAL

- This manual is part of the product and should be kept near the instrument for easy and quick reference.
- The instrument shall not be used for purposes different from those described hereunder. It cannot be used as a safety device.
- Check the application limits before proceeding.
- Copeland Controls Srl reserves the right to change the composition of its products, even without notice, ensuring the same and unchanged functionality.

1.2 SAFETY PRECAUTIONS

- Check the supply voltage is correct before connecting the instrument.
- Do not expose to water or moisture: use the controller only within the operating limits avoiding sudden temperature changes with high atmospheric humidity to prevent formation of condensation.
- Warning: disconnect all electrical connections before any kind of maintenance.
- Fit the probe where it is not accessible by the End User. The instrument must not be opened.
- In case of failure or faulty operation send the instrument back to the distributor or to Copeland Controls Srl (see address) with a detailed description of the fault.
- Consider the maximum current which can be applied to each relay (see Technical Data).
- Ensure that the wires for probes, loads and the power supply are separated and far enough from each other, without crossing or intertwining.
- In case of applications in industrial environments, the use of mains filters (our mod. FT1) in parallel with inductive loads could be useful.

2. GENERAL DESCRIPTION

The **XR06CH**, **format 32 x 74 x 60 mm**, is microprocessor-based controller, suitable for applications on medium or low temperature ventilated refrigerating units. It has three relay outputs to control compressor, fan, and defrost which can be either electrical or reverse cycle (hot gas). The device is also provided with 2 NTC probe inputs, the first one for temperature control and the second one to be located onto the evaporator, to control the defrost termination temperature and to managed the fan and it's provided with a configurable digital input. The HOT KEY output allows to connect the unit, by means of the external module XJ485-CX, to a network line **ModBUS-RTU** compatible such as the monitoring units of X-WEB family. It allows to program the controller by means the HOT KEY programming keyboard. The instrument is fully configurable through special parameters that can be easily programmed through the keyboard.

3. REGULATION

The regulation is performed according to the temperature measured by the thermostat probe with a positive differential from the set point: if the temperature increases and reaches set point plus differential the compressor is started and then turned off when the temperature reaches the set point value again.

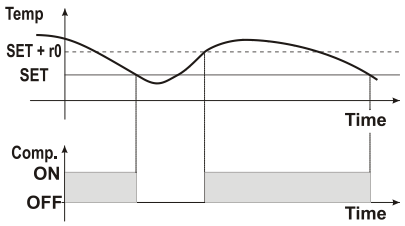

In case of fault in the thermostat probe the start and stop of the compressor are timed through parameters "**Cy**" and "**Cn**".

4. DEFROST

Two defrost modes are available through the "**td**" parameter:

- **td=EL** → defrost through electrical heater (compressor OFF)
- **td=in** → hot gas defrost (compressor ON).

Other parameters are used to control the interval between defrost cycles (**id**), its maximum length (**Md**) and two defrost modes: timed or controlled by the evaporator's probe. At the end of defrost dripping time is started, its length is set in the **dt** parameter. With **dt=0** the dripping time is disabled.

5. FANS

With **FC** parameter it can be selected the fans functioning:

- **FC=cn** → will switch ON and OFF with the compressor and **not run** during defrost
- **FC=on** → fans will run even if the compressor is off, and not run during defrost

After defrost, there is a timed fan delay allowing for drip time, set by means of the "**Fd**" parameter.

- **FC=cy** → fans will switch ON and OFF with the compressor and run during defrost
- **FC=oY** → fans will run continuously also during defrost.

An additional parameter "**FS**" provides the setting of temperature, detected by the evaporator probe, above which the fans are always OFF. This is used to make sure circulation of air only if his temperature is lower than set in "**FS**".

5.1 FANS AND DIGITAL INPUT

When the digital input is configured as door switch **iF=do**, fans and compressor status depends on the **dC** parameter value:

- **dC=no** → normal regulation;
- **dC=Fn** → fans OFF;
- **dC=cP** → compressor OFF;
- **dC=Fc** → compressor and fans OFF.

When **rd=y**, the regulation restart with door open alarm.

6. FRONT PANEL COMMANDS



SET	To display target set point, in programming mode it selects a parameter or confirm an operation.
❄	(**DEF**) To start a manual defrost.
∧	(**UP**) In programming mode it browses the parameter codes or increases the displayed value.
⏻ ∨	(**DOWN**) In programming mode it browses the parameter codes or decreases the displayed value. To put the controller in "OFF" or "ON" mode

KEYS COMBINATION

⏻ ∨	+	∧	To lock or unlock the keyboard
SET	+	⏻ ∨	To enter in programming mode
SET	+	∧	To return to room temperature display
❄	+	∧	To reset parameter

LED	MODE	DESCRIPTION
❄	**On**	Compressor enabled
	Flashing	- Compressor activation delay active (during **AC** time) - Compressor stop for micro-door
❄	**On**	Defrost in progress
	Flashing	- Defrost delay active (during time **dd**) - Dripping in progress (during time **dt**)
	On	Fans output enabled
	Flashing	Fans delay after defrost
(!)	**On**	Alarms happend
	Flashing	--

6.1 HOW TO SEE THE SET POINT

1. Push and immediately release the **SET** key, the set point will be showed;
2. Push and immediately release the **SET** key or wait about 5 sec to return to normal visualisation.

6.2 HOW TO CHANGE THE SETPOINT

1. Push the **SET** key for more than 2 sec to change the Set point value;
2. The value of the set point will be displayed and the icon [°C] or [°F] starts blinking;
3. Change the current value by using **UP** or **DOWN** buttons.
4. Save the new value by using **SET** button or wait for 10 sec to exit from menu

6.3 HOW TO START A MANUAL DEFROST

Push the **DEF** button for more than 3 seconds and a manual defrost will start

6.4 HOW TO CHANGE A PARAMETER VALUE

To change the parameters` value operate as follows:

1. Enter the Programming mode by pressing the **SET+** ∨ keys for 3s.
2. Select the required parameter.
3. Press the "**SET**" key to display its value (set value starts to blink).
4. Use ∧ or ∨ to change its value.
5. Press "**SET**" to store the new value and move to the following parameter.

To exit: Press **SET+** ∧ or wait 15s without pressing a key.

NOTE: the set value is stored even when the procedure is exited by waiting the time-out to expire. Please restart the controller after change the parameters.

6.5 HOW TO RESET TO THE FACTORY PARAMETER VALUE

In the first 60s after controller power-on, it allows user to reset to the factory parameter through key combination with steps below:

1. Start pressing DEF ❄ key and ∧ for 5s
2. Then release just ∧ but keep DEF ❄ key another 5s. Then parameter reset successfully by controller re-start automatically.

NOTE:

- The Parameters Factory Reset function is available only after **Fr=Y** has configured.
- The Parameters Factory Reset function shall be accessible in the first 60 seconds from the device power-on. The default configuration will initiate the loading, during this time all regulation will be interrupted, relays will be powered off, and the controllers is reset.

6.6 HIDDEN MENU

The hidden menu includes all the parameters of the instrument.

HOW TO ENTER THE HIDDEN MENU

1. Enter the Programming mode by pressing the **SET+** ∨ keys for 3s (Set value starts to blink).

2. Released the keys, then push again the **SET+** ⩛ keys for more than 7s. The L2 label will be displayed immediately followed from the Hy parameter.
   NOW YOU ARE IN THE HIDDEN MENU.
3. Select the required parameter.
4. Press the "**SET**" key to display its value
5. Use ⩚ or ⩛ to change its value.
6. Press "**SET**" to store the new value and move to the following parameter.

To exit: Press **SET+** ⩚ or wait 15s without pressing a key.
NOTE1: if there aren't any parameter in L1, after 3s the "nP" message is displayed. Keep the keys pushed till the L2 message is displayed.
NOTE2: the set value is stored even when the procedure is exited by waiting the time-out to expire.

HOW TO MOVE A PARAMETER FROM THE HIDDEN MENU TO THE FIRST LEVEL AND VICEVERSA.
Each parameter present in the HIDDEN MENU can be removed or put into "THE FIRST LEVEL" (user level) by pressing **SET+** ⩛. In HIDDEN MENU when a parameter is present in First Level the decimal point is on.

6.7 TO LOCK THE KEYBOARD

1. Keep pressed for more than 3s the ⩚ and ⩛ keys.
2. The "**OF**" message will be displayed and the keyboard will be locked. If a key is pressed more than 3s the "OF" message will be displayed.

6.8 TO UNLOCK THE KEYBOARD

Keep pressed together for more than 3s the ⩚ and ⩛ keys till the **"on"** message will be displayed.

6.9 THE ON/OFF FUNCTION

With "**b3 = oF**", by keeping pushed the **DOWN** key, the instrument is switched off. The **"OF"** message is displayed. In this configuration, the regulation is disabled.
To switch the instrument on, push again the **DOWN** key.

WARNING: Loads connected to the normally closed contacts of the relays are always supplied and under voltage, even if the instrument is in stand by mode.

7. PARAMETERS

REGULATION

Hy **Differential:** (0,1°C ÷ 25°C / 1°F ÷ 45°F) Intervention differential for set point. Compressor Cut IN is SET POINT + differential (Hy). Compressor Cut OUT is when the temperature reaches the set point.
LS **Minimum SET POINT:** (-55°C÷SET/-67°F÷SET): Sets the minimum value for the set point.
US **Maximum SET POINT:** (SET÷99°C/ SET÷99°F). Set the maximum value for set point.
od **Outputs activation delay at start up:** (0÷99min) This function is enabled at the initial start up of the instrument and inhibits any output activation for the period of time set in the parameter.
AC **Anti-short cycle delay**: (0÷50 min) minimum interval between the compressor stop and the following restart.
Cy **Compressor ON time with faulty probe:** (0÷99 min) time during which the compressor is active in case of faulty thermostat probe. With Cy=0 compressor is always OFF.
Cn **Compressor OFF time with faulty probe:** (0÷99 min) time during which the compressor is OFF in case of faulty thermostat probe. With Cn=0 compressor is always active.

DISPLAY

CF **Measurement unit:** (°C÷°F) **°C** =Celsius; **°F** =Fahrenheit. **WARNING**: When the measurement unit is changed the SET point and the values of the parameters Hy, LS, US, oE, o1, AU, AL have to be checked and modified if necessary.
rE **Resolution (only for °C):**(dE ÷ in) **dE=** decimal between -9.9 and 9.9°C; **in=** integer.
dy **Display delay:** (0÷15 min.) when the temperature increases, the display is updated of 1 °C/1°F after this time.

PROBES

PC **Type of probe: nt** = NTC; **Pt** = PTC
ot **First probe calibration:** (-9.9÷9.9°C / -17°F ÷ 17°F) allows to adjust possible offset of the first probe.
P2 **Evaporator probe presence: n=** not present; **y=** present.
oE **Second probe calibration:** (-9.9÷9.9°C / -17°F ÷ 17°F) allows to adjust possible offset of the second probe.
F5 **Filter probe enabling:** set the field of action of the internal measurement filter. **Nu**=not used; **AL**=the filter will always works on all probes; **do**=the filter will only works on all probes for 30 sec after opening of the door.
F6 **Filter coefficient:** define the coefficient for the Probe Filter. The lower the F6 value, the higher is the Probe Filter action (1 ÷ 99).

DEFROST

td **Defrost type:** (EL – in) **EL=** electrical heater, compressor OFF; **in=** hot gas, compressor ON;
dE **Defrost termination temperature:** (-55÷50°C / -67÷99°F) if **P2=Y** it sets the temperature measured by the evaporator probe, which causes the end of defrost.
id **Interval between defrost cycles:** (0÷99 minutes) Determines the time interval between the beginning of two defrost cycles.
Md **Maximum length for defrost:** (0÷99 min. with 0 no defrost) when **P2=n**, (not evaporator probe: timed defrost) it sets the defrost duration, when **P2 = y** (defrost end based on temperature) it sets the maximum length for defrost.
dd **Start defrost delay:** (0÷99min) This is useful when different defrost start times are necessary to avoid overloading the plant.
dF **Display during defrost:** (rt / it / SP / dE) **rt=** real temperature; **it=** start defrost temperature; **SP=** SET-POINT; **dE=** label **dF.**
dt **Drip time:** (0÷99 min) time interval between reaching defrost termination temperature and the restoring of the control's normal operation. This time allows the evaporator to eliminate water drops that might have formed due to defrost.
dP **Defrost at power –on:** (y÷n) **y=** at power on defrost starts; **n=** defrost doesn't start at power-on
tA **Max display delay after defrost** (0-99min)

FANS

FC **Fans operating mode:** (cn, on, cY, oY) **cn=** in runs with the compressor, OFF during defrost; **on=** continuous mode, OFF during defrost; **cY=** runs with the compressor, ON during defrost; **oY=** continuous mode, ON during defrost.
Fd **Fans delay after defrost:** (0÷99 min) Interval between end of defrost and evaporator fans start.
FS **Fans stop temperature:** (-55÷50°C / -67°F ÷ 99°F) setting of temperature, detected by evaporator probe, above which fans are always OFF.
Fy **Fan hysteresis** [0.1 to 25°C; 1 to 45°F]

ALARMS

AU **Maximum temperature alarm:** (AL÷99°C/99°F) when this temperature is reached the alarm is enabled, after the "**Ad**" delay time.
AL **Minimum temperature alarm:** (-55÷AU°C /-67÷AU°F) when this temperature is reached the alarm is enabled, after the "**Ad**" delay time.
AH **Alarm hysteresis** [0.1 to 25°C; 1 to 45°F]
Ad **Temperature alarm delay:** (0÷99 min) time interval between the detection of an alarm condition and alarm signalling.
dA **Exclusion of temperature alarm at startup:** (0÷99 min) time interval between the detection of the temperature alarm condition after instrument power on and alarm signalling.
oA **Open door alarm delay**: 0 to 99 min

DIGITAL INPUT

iP **Digital input polarity:** (oP ÷ cL) **oP=** activated by closing the contact; **cL=** activated by opening the contact;
iF **Digital input configuration**: (nU/do/EA/bA/dF/Fn/Au) **nU=** not used; **do=** door switch function; **EA=** external alarm: "EA" message is displayed; **bA=** serious alarm "CA" message is displayed; **dF=** defrost activation; **Fn=**start the evaporator fan; **Au** =not used.
di **Digital input delay:** (0÷99 min) with **iF=EA** or **bA** delay between the detection of the external alarm condition and its signalling. With **iF=do** it represents the delay to activate the door open alarm.
dC **Compressor and fan status when open door**: (no/Fn/cP/Fc): **no=** normal; **Fn** = Fans OFF; **cP** =Compressor OFF; **Fc** = Compressor and fans OFF;
rd **Regulation with door open**: (n÷y) **n** = no regulation if door is opened; **Y=** when di is elapsed regulation restarts even if door open alarm is present;

SERIAL OUTPUT

Sr Serial address (1 to 10)
bd Baudrate 96(0); 19(1); 38(2); 57(3)
PA Parity; Communication no(0); od(1); ev(2)

OTHER

Fr **Parameter factory reset:** (n ÷y) **n=** disable to reset to factory parameters; **y=** able to reset to factory parameters
d1 **Thermostat probe display (read only)**
d2 **Evaporator probe display (read only)**
rL **Firmware release** (readable only)
Sv **Sub-versioning** reading only
Pt **Parameter code table**

8. DIGITAL INPUTS

The free voltage digital input is programmable in different configurations by the "**iF**" parameter.

8.1 NOT USED (IF=NU)

The digital input is not used.

8.2 DOOR SWITCH (IF=DO)

It signals the door status and the corresponding relay output status through the "**dC**" parameter: **no** = normal (any change); **Fn** = Fan OFF; **CP** = Compressor OFF; **FC** = Compressor and fan OFF.
Since the door is opened, after the delay time set through parameter "**di**", the door alarm is enabled, the display shows the message "**dA**" and **the regulation restarts if rd = y.** The alarm stops as soon as the external digital input is disabled again. With the door open, the high and low temperature alarms are disabled.

8.3 EXTERNAL ALARM (IF=EA)

As soon as the digital input is activated the unit will wait for "**di**" time delay before signalling the "**EA**" alarm message. The outputs status don't change. The alarm stops just after the digital input is de-activated.

8.4 SERIOUS ALARM (IF=BA)

When the digital input is activated, the unit will wait for "**di**" delay before signalling the "**CA**" alarm message. The relay outputs are switched OFF. The alarm will stop as soon as the digital input is de-activated.

8.5 START DEFROST (IF=DF)

It starts a defrost if there are the right conditions. After the defrost is finished, the normal regulation will restart only if the digital input is disabled otherwise the instrument will wait until the "**Md**" safety time is expired.

8.6 START EVAPRATOR FAN (IF=FN)

It starts an evaporator fan if there are the right conditions.

8.7 TURN ON THE AUXILARY RELAY (IF=AU)

It starts a turn on the auxiliary relay if there are the right conditions.

9. TTL SERIAL LINE – for Monitoring systems

The TTL serial line, available through the HOT KEY connector, allows by means of the external TTL/RS485 converter, **XJ485-CX**, to connect the instrument to a monitoring system **ModBUS-RTU** compatible.

10. INSTALLATION AND MOUNTING

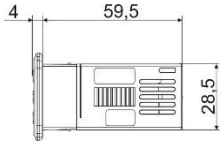

Instrument **XR06CH** shall be mounted on vertical panel, in a 29x71 mm hole, and fixed using the special bracket supplied.
The temperature range allowed for correct operation is 0÷60 °C. Avoid places subject to strong vibrations, corrosive gases, excessive dirt or humidity. The same recommendations apply to probes. Let air circulate by the cooling holes.

11. ELECTRICAL CONNECTIONS

The instrument is provided with screw terminal block to connect cables with a cross section up to 2,5 mm^2. Before connecting cables make sure the power supply complies with the instrument's requirements. Separate the probe cables from the power supply cables, from the outputs and the power connections. Do not exceed the maximum current allowed on each relay, in case of heavier loads use a suitable external relay.

11.1 PROBES

The probes shall be mounted with the bulb upwards to prevent damages due to casual liquid infiltration. It is recommended to place the thermostat probe away from air streams to correctly measure the average room temperature. Place the defrost termination probe among the evaporator fins in the coldest place, where most ice is formed, far from heaters or from the warmest place during defrost, to prevent premature defrost termination.

12. HOW TO USE THE HOTKEY

12.1 HOW TO PROGRAM THE HOT KEY FROM THE INSTRUMENT (UPLOAD)

1. Program one controller with the front keypad.
2. When the controller is ON, insert the "Hot key" and push ⩓ key; the "**uP**" message appears followed a by flashing "**En**"
3. Push "**SET**" key and the "**En**" will stop flashing.
4. Turn OFF the instrument remove the "Hot Key", then turn it ON again.

NOTE: the "**Er**" message is displayed for failed programming. In this case push again ⩓ key if you want to restart the upload again or remove the "Hot key" to abort the operation.

12.2 HOW TO PROGRAM AN INSTRUMENT USING HOT KEY (DOWNLOAD)

1. Turn OFF the instrument.
2. Insert a **programmed "Hot Key" into the 5 PIN receptacle** and then turn the Controller ON.
3. Automatically the parameter list of the "Hot Key" is downloaded into the Controller memory, successfully followed by appear "**En**" label.
4. After 10 seconds the instrument will restart working with the new parameters.
5. Remove the "Hot Key"..

NOTE: the "**Er**" message is displayed for failed programming. Check the Hotkey connection, check the data into Hotkey and repeat the action above.

13. ALARM SIGNALLING

Mess.	Cause	Outputs
"P1"	Room probe failure	Compressor output according to "Cy" e "Cn"
"P2"	Evaporator probe failure	Defrost end is timed
"HA"	Maximum temperature alarm	Outputs unchanged
"LA"	Minimum temperature alarm	Outputs unchanged
"EA"	External alarm	Outputs unchanged
"CA"	Serious external alarm	All outputs OFF
"dA"	Door Open	Compressor and fans restart

13.1 ALARM RECOVERY

Probe alarms **P1**" and "**P2"** start some seconds after the fault in the related probe; they automatically stop some seconds after the probe restarts normal operation. Check connections before replacing the probe. Temperature alarms "**HA**" and "**LA**" automatically stop as soon as the temperature returns to normal values.
Alarms **"EA"** and **"CA"** (with iF=bL) recover as soon as the digital input is disabled.

14. WIRINGS

15.1 XR06CH – 20+8+5A OR 16+8+5A – 110VAC OR 230VAC

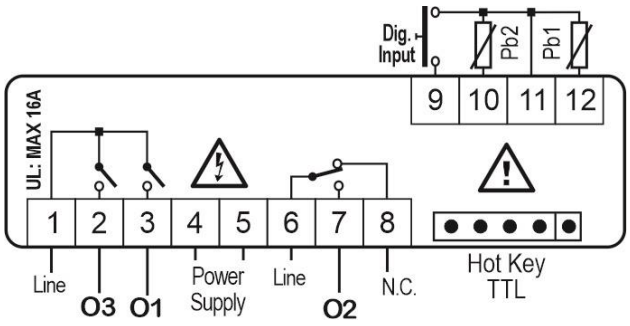

NOTE: The compressor relay is 20(8)A or 16(6)A depending on the model.
NOTE: Connect the 120Vac power supply to 4-5

15. DEFAULT SETTING VALUES

LABEL	DESCRIPTION	RANGE	DEFAULT
REGULATION			
St	Set point	LS-US	3.0°C / 37 °F
Hy	Differential	0.1 ÷ 25°C/1 ÷ 45°F	2.0°C / 4 °F
LS	Minimum Set Point	-55°C÷SET/-67°F÷SET	-55 °C / -55°F
US	Maximum Set Point	SET÷99°C/ SET÷99°F	99 °C / 99°F
od	Outputs activation delay at start up	0 ÷ 99 min	0
AC	Anti-short cycle delay	0 ÷ 50 min	1
Cy	Compressor ON time faulty probe	0 ÷ 99 min	15
Cn	Compressor OFF time faulty probe	0 ÷ 99 min	30
DISPLAY			
CF	Measurement units	°C - °F	°C / °F
rE	Resolution (only for °C)	dE – in	dE/in
dy	Display delay	0 ÷ 15 min	0
PROBE			
PC	Type of probe	nt; Pt	nt
ot	First probe calibration	-9.9÷9.9°C/-17÷17°F	0.0
P2	Second probe presence	n – Y	y
oE	Second probe calibration	-9.9÷9.9°C/-17÷17°F	0.0
F5	Filter probe enabling	nu; do; AL	nu
F6	Filter coefficient	20	20
DEFROST			
td	Defrost type	EL – in	EL
dE	Defrost termination temperature	-55÷50°C/-67÷99°F	8.0 °C / 46 °F
id	Interval between defrost cycles	0 ÷ 99 hours	6
Md	Maximum length for defrost	0 ÷ 99 min.	30
dd	Start defrost delay	0 ÷ 99 min.	0
dF	Display during defrost	rt – it – SP – dE	it
dt	Drip time	0 ÷ 99 min	0
dP	Defrost at power-on	y - n	n
tA	Max display delay after defrost	15	Pr2
FANS			
FC	Fans operating mode	cn – on – cY – oY	on
Fd	Fans delay after defrost	0 ÷ 99 min	10
FS	Fans stop temperature	-55÷50°C/-67÷99°F	2.0 °C / 36 °F
FH	Fan hysteresis	0.1 ÷ 25°C/1 ÷ 45°F	2.0°C / 4 °F
ALARMS			
AU	Maximum temperature alarm	AL÷99°C / AL÷99°F	99 °C / 99 °F
AL	Minimum temperature alarm	-55°C÷AU/-67°F÷AU	-55 °C / -55 °F
AH	Alarm hysteresis	0.1 ÷ 25°C/1 ÷ 45°F	2.0°C / 4 °F
Ad	Temperature alarm delay	0 ÷ 99 min	15
dA	Exclusion of temperature alarm at startup	0 ÷ 99 min	90
oA	Open door alarm delay	0 ÷ 99 min	15
DIGITAL INPUT			
iP	Digital input polarity	cL – oP	cL
iF	Digital input configuration	do – EA – bA –dF– Fn– Hc –Au	do
di	Digital input delay	0 ÷ 99 min	15
dC	Compressor and fan status when open door	no /Fn / cP / Fc	FC
rd	Regulation with door open	n - y	y
SERIAL LINE			
Sr	Serial address	1-10	1
bd	Baudrate	0-3	96
PA	Parity	*no; od; ev*	no
OTHER			
Fr	Parameter factory reset	y - n	y
d1	Thermostat probe display	Read Only	- - -
d2	Evaporator probe display	Read Only	- - -
L	Firmware release (readable only)	Read Only	- - -
Sv	Subversioning	Read Only	- - -
Pt	Parameter code table	Read Only	- - -
rL	Firmware release	Read Only	- - -

16. TECHNICAL DATA

FEATURES	DESCRIPTION			
Housing	Self-Extinguishing PC Resin			
Dimensions	Front 32x74 mm; Case depth 50 mm			
Mounting device	Panel Mounting 71x29mm Cutout			
Degree of Protection				
		Front: IP65	**Back**: IP00	
Power Supply	230Vac ±10%, 50/60Hz --- 110Vac ±10%, 50/60Hz			
Overvoltage Category	II			
Rated Power	230VAC: 3,5VA Max (ENEC)			
Rated Impulse Voltage	2500V			
Display	2 digits, LED red (white and blue are optional), height 19 mm			
Buzzer	Optional			
Software Class	A			
Terminal blocks / Terminal Connections	**Low Voltage Signals:** Screw Terminal Block, wire sections between 1 and 2,5 mm² Max tightening force: 0,5 N*m **High Voltage Signals:** Screw Terminal Block, wire sections between 1 and 2,5 mm² Max tightening force: 0,5 N*m			
Data Storing	**Parameters:** Internal Flash			
Type of Action	1.B			
Pollution Degree	2, non-condensing humidity			
Ambient Operating Temperature and Humidity	**UL/IEC**	-20÷60°C / 0÷60°C		
Shipping and Storage Temperature	-40÷85°C			
Measurement Range	**NTC:** -40÷110°C, resolution 0,1°C o 1°C (selectable); -67÷99°F, resolution 1°F **PTC:** -100÷150°C, resolution 0,1°C o 1°C (selectable);			
Accuracy	NTC, PTC: ±1% compared to the full scale. If NTC probe are used: Class 0.5; less than 1% in the range [-25°C a +10°C].			
Inputs	1 NTC o PTC (configurable)			
	1 free voltage contact			
Relay Outputs ***Configuration 20+8+5***		**Nominal**	**UL 60730**	**ENEC**
	O1 (1-3)	20A	16FLA/96LRA	16(8)A MAX **
	O2 (7-8)	8A	4.9FLA/29.4LRA	8(3)A
	O3 (1-2)	5A	1.9FLA/11.4LRA	4(1)A
Relay Outputs ***Configuration 16+8+5***		**Nominal**	**UL 60730**	**ENEC**
	O1 (1-3)	16A *	10FLA/60LRA	10(6)A
	O2 (7-8)	8A	4.9FLA/29.4LRA	8(3)A
	O3 (1-2)	5A	1.9FLA/11.4LRA	4(1)A
I/O Port	HOT KEY: MAX voltage allowed 5 VCC. **DO NOT CONNECT ANY EXTERNAL POWER SUPPLY.**			
Purpose of Control	Operating Control			
Construction of Control	Incorporated Control, intended to be used in Class I or Class II equipment			
Approvals	IEC/EN/UL 60730-1; IEC/EN/UL 60730-2-9			

(*) For the available inrush models, please check the official ordering code.
(**) On the common terminal block for outputs O1 and O2, the max allowed current is 16Amps.

LOGITRON s.r.o.
Jeremiasova 947/16
155 00 PRAHA 5

tel. +420 295 150 065
www.logitron.cz